MAJESTIC™ Fireplaces

How to Enjoy Your Woodburning Fireplace

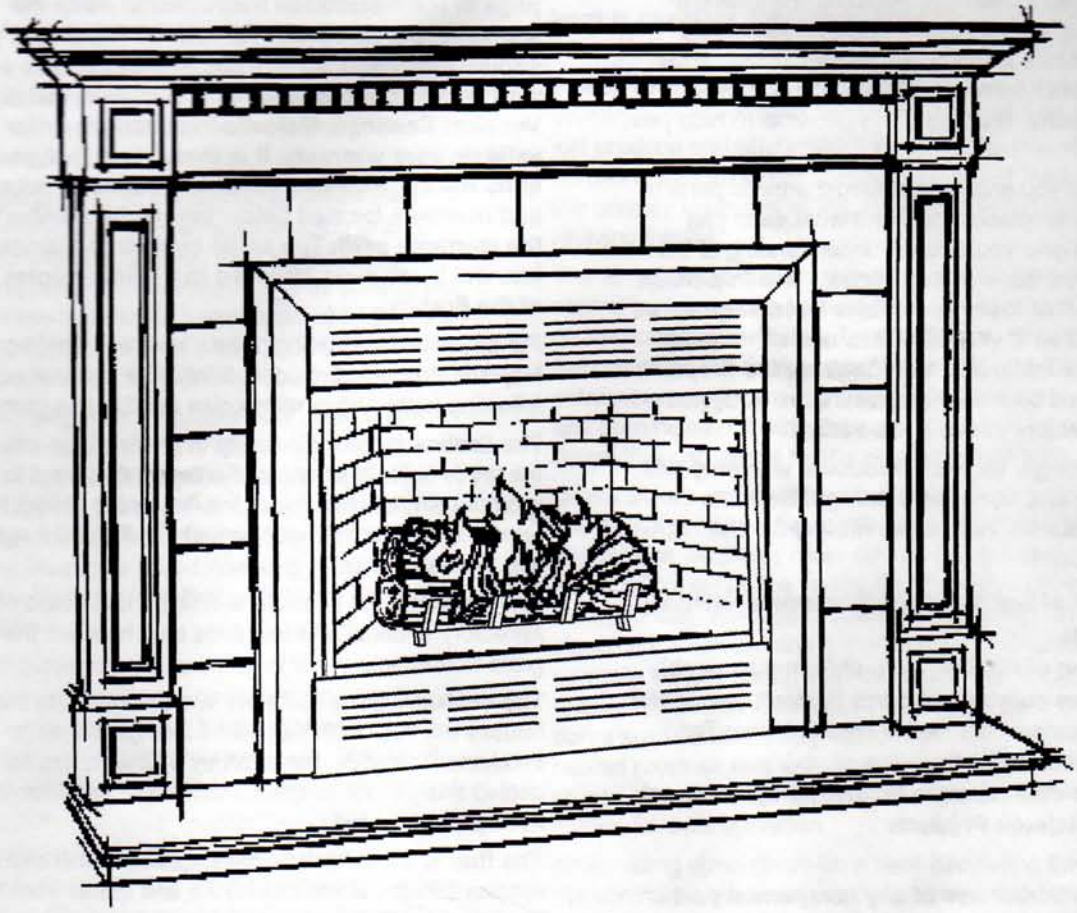

For: BC, BFC, BR, CR, CVR, EWF, SC, SHR, SR, STR and WMC Series Fireplaces

Save This Homeowner's Manual

20000706 7/03 Rev. 4

Meet Your New Vermont Castings, Majestic Products Fireplace

Your new Vermont Castings, Majestic Products fireplace is an engineered system designed to provide maximum pleasure with trouble-free operation. It can only perform to its fullest potential if you operate and care for it properly. This manual is provided to help you do that.

The first things you should know are the basic parts of your particular fireplace model and what each part does. This will give you a better understanding of the descriptions that follow in this manual. **It is important to note that all of these parts have been engineered to work together. If you decide to use some unapproved part or make any modification, the fireplace will not operate as it was engineered to and, therefore, may possibly cause a fire hazard.**

Vermont Castings, Majestic Products warranty will be voided by, and Vermont Castings, Majestic Products disclaims any responsibility for the following actions:

- **Installation of any damaged fireplace or chimney component;**
- **Modification of the fireplace, chimney assembly or any of the component parts thereof;** (except for chase flashings as detailed in MBSChimney Top installation instructions).
- **Installation other than as instructed by Vermont Castings, Majestic Products**

  or
- **Installation and/or use of any component part not manufactured or approved by Vermont Castings, Majestic Products in combination or assembly with a Vermont Castings, Majestic Products fireplace system, notwithstanding any independent testing laboratory or other third party approval of such component parts or accessory.**

Any of the above actions may possibly cause a fire

NOTE: Remove the warranty card from the plastic bag in which you found this owner's manual. The warranty for your fireplace is located on the back page of the installation instructions. Keep the warranty in a safe place for future reference if you should ever need service covered under this warranty. Fill out the warranty card and mail it to Vermont Castings, Majestic Products. In order to validate your warranty, it is mandatory that you write the serialization number (a series of letters and numbers located below the model number) on the warranty card. The serial number is stamped into the black plate attached to the inner dome side of the firebox.

For better understanding of your Vermont Castings, Majestic Products fireplace, familiarize yourself with the following parts and terminologies used in this manual:

The firebox is the main cavity of the fireplace where the fire is built. Its shape and size are designed to promote efficient burning of the fire and to reflect the maximum amount of heat through the fireplace opening into the room.

The hearth is the floor of the firebox. It is made of a refractory material and functions as a base for the fire grate to rest on.

The chimney is the complete vertical structure that houses the flue. With Vermont Castings, Majestic Products fireplaces, the chimney utilizes a special air-cooled design that keeps the outside of the chimney from getting too hot.

The flue is the innermost passageway of the chimney system through which the smoke and gases from the fire travel to the out-of-doors.

The damper is the door to the flue that prevents loss of heated room air from escaping up the flue when the fireplace is not in use. The damper must be in the open position whenever fire is burning so that smoke and gases can escape up the flue rather than into the room. It should not be closed until the fire is completely out. The BR, BC, CR, SR, SC, SHR, STR, CVR and EWF Series fireplace damper operates only in the full open or full closed position. The control is located in the front firebox dome areas. (Figs. 1, 2, 2a & 3)

The EWF damper is open to start or revive the fire and closed, for normal operation and to control burn rate. **NOTE:** Always open the damper before opening the doors. Close damper to set burn rate.

The WMC Series fireplace damper is adjustable to help provide a more efficient fireplace operation. Dampering down the open flue further intensifies the firebox heat exchanger temperature by reducing the loss of hot flue gases. The adjustable damper control is located in the center just below the top outlet grille. (Fig. 1) Refer to Proper Operating Procedure on Page 4.

The firescreen is a protective curtain of wire mesh that helps keep sparks and hot embers from leaving the firebox. The firescreen should always be kept closed whenever a fire is burning in the firebox.

Your Vermont Castings, Majestic Products fireplace may also include many of the following energy efficient components that provide additional heat output and efficient home operation:

Heat-Circulation adds to the standard radiant heat output of a traditional fireplace by distributing useful amounts of convective heat into the home. Heat-circulating fireplaces circulate cool room air around the hot firebox where it is warmed and returned to the room as beneficial heat. The BC, SC, WMC, BFC and EWF Series fireplace models feature heat circulation.

The Heat Exchanger is a multiple wall construction that directs room air around the firebox and back into the room of a heat-circulating fireplace system. Heat transfer from the hot fire to the circulating room air occurs through these passageways. The heat exchanger is the heart of a heat-circulating system which provides the extra room heat that is lost with conventional fireplaces.

The Air Inlet/Outlet Grilles are part of the heat-circulation system. Cool room air enters through the bottom grille and/or lower side inlet grilles and travels through the heat exchanger passageways. The resulting hot air is then returned to the room through the upper outlet grille.

NOTE: Air inlet/outlet grilles should never be covered or blocked off. The heat-circulation system is also used as fireplace cooling system for safe operation.

Outside Combustion Air: A fire requires a sufficient amount of air in order to burn properly. Insufficient air will cause smoking, sooting and harmful gases to filter out of the fireplace into the room. As the fire burns in the firebox, replacement air enters the firebox opening from the room to make up the loss of combustion air. Often tightly sealed and well insulated homes do not provide sufficient amounts of air for this natural replacement process. To maintain a constant flow of combustion air, direct outside air may be needed.

Vermont Castings, Majestic Products fireplaces are designed with outside air capabilities which supply outside combustion air directly to the firebox. The air system requires ducting from fireplace to an outside air source at time of original installation. The WMC, BR, BC, CR, SC, SHR, SR, STR and CVR Series fireplaces offer this feature as standard equipment. The BFC fireplace includes integral outside air and no additional ducting is necessary.

If your fireplace is equipped with outside air, the control lever will be located at the front edge of the left side brick on the BR, SR, WMC and STR Series. On the CR Series fireplaces, it is located at the lower left or right corner of the air inlet. On the SHR Series, the control lever is located in the center, just above the left side brick. Refer to Page 6 for proper operation procedure.

Primary Air Control: On the EWF Series fireplace, the primary air control regulates the amount of heat the fire will produce and how long it will burn. The primary air control is located in the upper left corner of the unit. It is the primary source of air for starting, maintaining and reviving the fire.

The air supply is open to the maximum when the control lever is rotated clockwise and closed when rotated counterclockwise. To vary the burn rate, adjust the control to the desired position in between these extremes; opening the primary air control makes the unit burn hotter. Closing the control slows the unit down. You can adjust to any position you desire.

Glass Doors improve fireplace efficiency to help save home energy. When firing a fireplace, the need for combustion air draws room air into the firebox where it mixes with the hot flue gases and then is expelled up the open flue. The loss of preheated room air is most significant when burning a low intensive fire which normally occurs during start-up and shutdown of the fireplace. Vermont Castings, Majestic Productglass doors are specially designed to reduce the amount of heated room air loss and, at the same time, allow the proper amount of combustion air to be filtered into the firebox for safe operation.

When using glass doors on a heat-circulating fireplace, the controlled combustion air also intensifies the heat exchanger temperature and slows the fuel burning rate. The result is maximum heating while using the least amount of fuel. Glass doors are standard equipment on WMC, BFC and EWF Series fireplaces and are offered as optional accessories for all other Vermont Castings, Majestic Products fireplace models. Refer to proper operation procedures on Page 6 and 7.

Forced Air Circulation: Heat-circulating fireplaces use the natural process of hot air rising to distribute heat from the fireplace to the room. This principle is sufficient for small room application. To distribute a constant flow of warm air further into a larger room, forced air fans are recommended. To determine if the fireplace is equipped with fans, use a flashlight and look through the lower inlet air grille. Vermont Castings, Majestic Products offers optional fan kits for all heat-circulating models. For easy installation of an optional fan kit, the fireplace should be wired during its installation. Fans are standard equipment for WMC and BFC units.

NOTE: Vermont Castings, Majestic Products Forced Air Systems are designed to distribute heat at a specific CFM rate. Any attempt to increase air movement through the heat exchanger will decrease the heat transfer time which will result in cooler heat circulation temperatures.

Energy efficient options such as glass doors and fans (Heat-circulating models) can easily be added after your original fireplace installation. Refer to Page 11 for description and proper model number.

How to Operate Your Vermont Castings, Majestic Products Fireplace

Your fireplace can provide countless hours of pleasure and security. However, use your Vermont Castings, Majestic Products fireplace carefully because any time you build a fire inside a house, a problem may develop.

1. Open Flue Damper

The flue damper is meant to be closed only when the fire is completely out and the fireplace is not in use. This prevents the loss of room air up the open flue. Remember, the damper must always be in the "fully open" position when a fire is burning.

WMC Damper: The WMC Series fireplace flue damper is "opened" and "closed" by a knob located just below the top outlet grille. (Fig. 1) The damper is adjustable and may be adjusted to a partially open position as long as the glass doors are closed and smoke buildup does not occur in the firebox. Most efficient operation is obtained in the least open position. When refueling, fully open damper before opening glass doors.

BR, BC, CR, SR and SC Series Damper: The flue damper is located in the dome area in the middle of the firebox. The damper is opened by rotating the lever to the right. The damper is closed by pushing the lever to the left and is locked closed by the damper clip located on the dome. **The damper is not adjustable and must only be operated in the fully open position.** (Fig. 2)

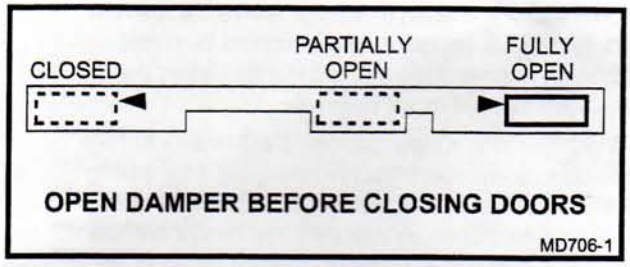

Fig. 1 WMC Series damper control positions.

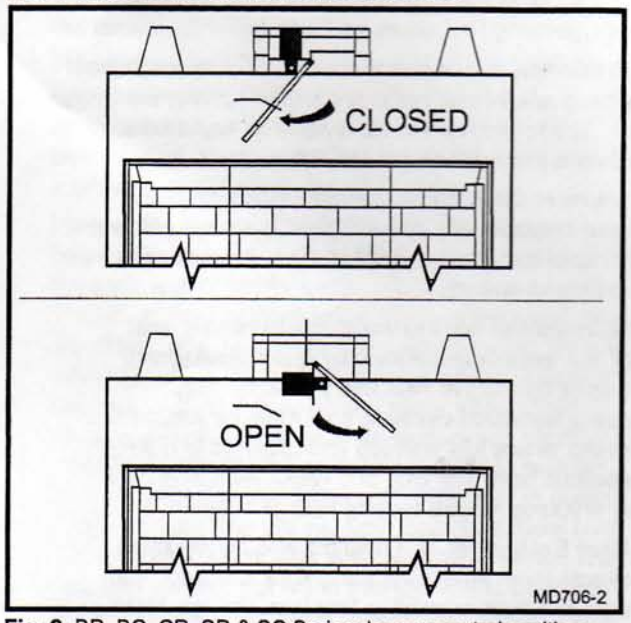

Fig. 2 BR, BC, CR, SR & SC Series damper control positions.

STR & CVR Series Damper: The flue damper is located in the dome area in the middle of the firebox. The damper is opened by pushing the lever in an upward direction. The damper is closed by pulling the lever down toward the hearth brick at the bottom of the fireplace. **The damper is not adjustable and must only be operated in the fully open position.** (Fig. 3)

SHR Series Damper: The flue damper is "opened" and "closed" by an actuator handle and linkage located in the front of the combustion dome of the fireplace. **The damper is not adjustable and must be operated in the fully open position.** (Figs. 4 & 5)

EWF Series Damper: The flue damper control is located in the upper right corner of the fireplace. The damper is open when the lever is rotated clockwise and pulled out. Open the damper to start or revive a fire. The damper is closed when pushed in. When the damper is in the open position, with the lever pulled out, and rotated in the fully clockwise direction, the handle can 'telescope' back without closing the damper or any damper movement. There are no intermediate settings for the damper.

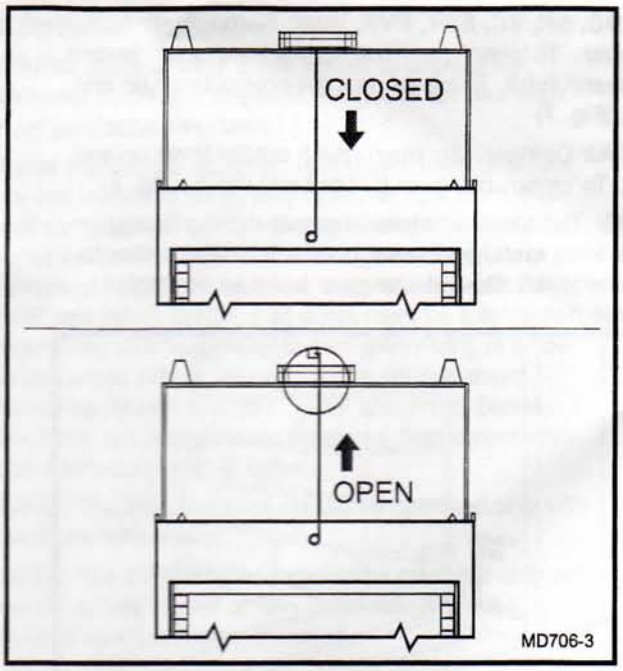

Fig. 3 STR & CVR Series damper control positions.

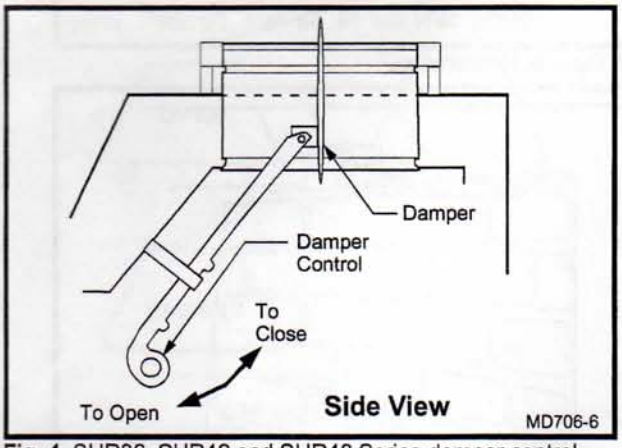

Fig. 4 SHR36, SHR42 and SHR48 Series damper control positions.

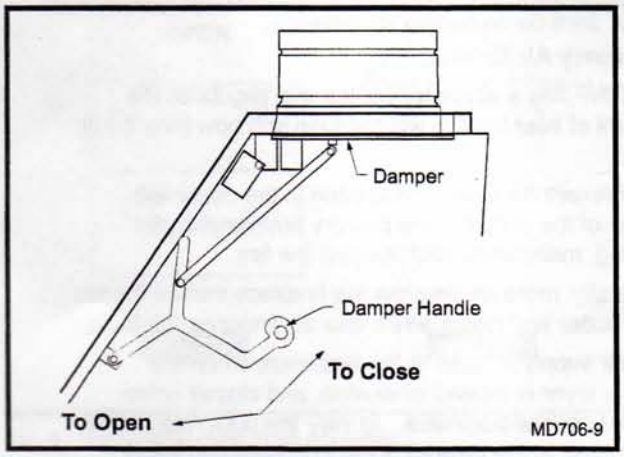

Fig. 5 SHR52 damper control.

2. Building the Fire

To build a fire, a basket grate should be used to raise the fuel off the hearth. Combustion air needs to flow up through the fuel for proper burning. Most Majestic fireplaces come equipped with a basket grate. A specially designed basket grate is required for your fireplace. When replacing the basket grate, a specific model must be used. Refer to Page 11 for the model number.

The EWF does not use a basket type grate. Build the fire directly on the grate. Do not elevate the wood.

Place a generous amount of crumpled or twisted newspaper under the grate on the hearth. Allow a few ends of the paper to extend out beyond the log area for later lighting. Arrange kindling (small diameter sticks) in a crisscross pattern on top of the paper.

Place a large diameter log, preferably one that has been split, across the grate within approximately 1/2" of the back wall of the fireplace. Place a second split log 1" to 2" in front of the first log. Place a third split log on top of the other two, forming a crude pyramid. Be sure the irregularities of the logs form air spaces between the logs. (Fig. 6) If they do not, place a few sticks of kindling between the logs to separate them slightly. Additional logs may be added as needed to maintain heat output. Logs should be split preferably in quarter sections or smaller pieces. Split logs have more burning surfaces than whole logs and burn more readily. The type and condition of wood that you use to build your fire will have a great effect on the heat output of your fireplace. For best results use oak, maple, birch, hickory, apple or similar hardwoods. The wood should be dry and seasoned 9 months to a year before use.

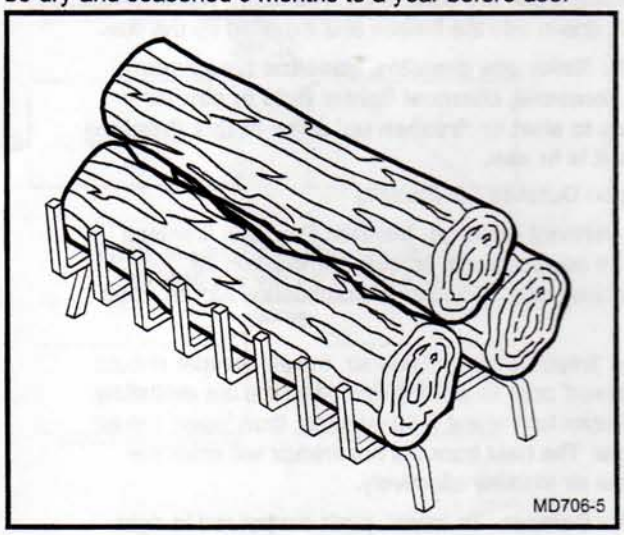

Fig. 6 Log placement on grate.

Soft woods, are not as desirable as hardwoods because they burn quickly and can cause resin build up in the flue. Wet or green wood smolders and often smokes.

The use of artificial logs of any type has been found to create smoking and sooting problems. These types of materials have also been found to increase the danger of fire. For these reasons the use of any type of artificial log is prohibited in any of our products. The use of any artificial logs will void any warranty associated with our products.

Caution: Do not burn scrap lumber, pine branches, trash, plastic, flame colorants, soot cleaners or other chemicals or compounds.

3. Starting the Fire

Before starting the fire, make sure the damper is in the fully open position.

Lay a sheet of newspaper on top of the logs and set it afire. This warms the chimney, improving the flow of hot air from the fire when it is started.

When warm-up newspaper is partially burned, ignite the starter paper under the kindling. Close the fireplace screens as soon as you have completed this step.

When firing a new fireplace, you may smell a slight odor and see smoke coming from the fireplace or the heat-circulating outlet grilles. This is the paint curing and oil burning off the metal. This is normal and will disappear after the first few fires. If your fireplace is equipped with glass doors and outside air, open the doors and close the outside air. The odors and smoke will be drawn into the firebox and expelled up the flue.

NOTE: Never use gasoline, gasoline type lantern fuel, kerosene, charcoal lighter fluid or similar liquids to start or 'freshen up' a fire in this fireplace while it is in use.

4. Open Outside Air Damper

Your Vermont Castings, Majestic Products fireplace may be equipped with outside combustion air. To determine, refer to "Outside Combustion Air" on Page 3.

If your fireplace has outside air, the air damper should be 'closed' prior to starting fire. Start the fire and allow the firebox to preheat 5-10 minutes, then 'open' the air damper. The heat from the hot firebox will draw the outside air in more effectively.

CR Air Damper. To 'open', push control rod to right and pull out. To 'close', push control lever away from the front face until it stops. Damper is spring-loaded and will hold closed.

BR, BC, SR, SC, STR, CVR, WMC Series Air Damper. To 'open', push the control lever down toward the hearth brick. To 'close', pull the control lever up and over. (Fig. 7)

SHR Air Damper. To 'open', push control lever up and back. To 'close', pull lever forward and down. (Fig. 8)

NOTE: To 'open' or 'close' damper during firing, use a long metal probe such as a fireplace poker to operate lever. Do not use your hand as control lever is hot.

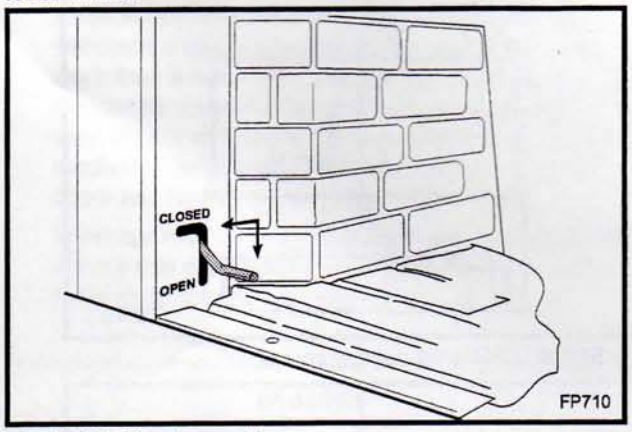

Fig. 7 Outside air operation.

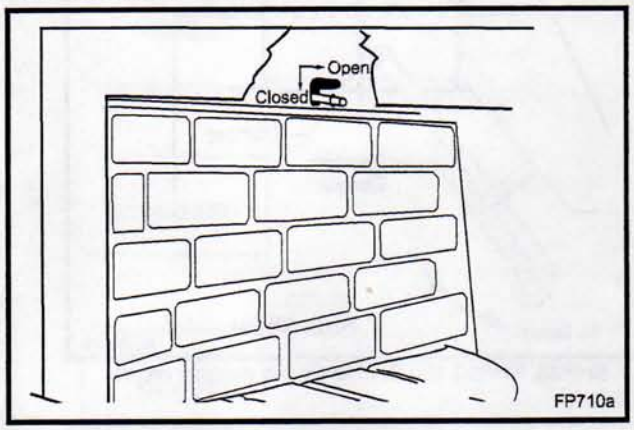

Fig. 8 SHR Series outside air operation.

5. Primary Air Control

The EWF has a single air control that regulates the amount of heat the fire will produce and how long it will burn.

The Primary Air Control is located in the upper left corner of the unit. It is the primary source of air for starting, maintaining and reviving the fire.

Generally, more air entering the fireplace makes the fire burn hotter and faster, while less air prolongs the burn.

The air supply is open to the maximum when the control lever is rotated clockwise, and closed when rotated counterclockwise. To vary the burn rate, adjust the control to the desired position in between these extremes; opening the primary air control makes the

6. Operating Glass Door

WARNING: Use only glass doors approved by Vermont Castings, Majestic Products for use with your particular fireplace.

If your fireplace is equipped with glass doors, start the fire and leave the doors fully open. AFTER the fire is well started, then the doors may be closed. We recommend for the most efficient use of glass doors on all models of Majestic fireplaces, except for models BFC, EWF and WMC Series, that doors must be fully open when firing at a 'moderate' to 'hot' rate. Firing at a 'low' to 'moderate' rate or allowing fire to die out, doors should be closed. The BFC, EWF and WMC Series fireplaces are designed for maximum heat output with doors fully closed at all times.

NOTE: The BFC fireplace should be operated only with the doors fully closed.

NOTE: The EWF fireplace should be operated only with the doors fully closed or fully open only when the optional spark screen is installed.

WARNING: FIREPLACES EQUIPPED WITH DOORS SHOULD BE OPERATED WITH DOORS FULLY OPEN OR DOORS FULLY CLOSED. IF DOORS ARE LEFT PARTLY OPEN, GAS AND FLAME MAY BE DRAWN OUT OF THE FIREPLACE OPENING CREATING RISKS OF BOTH FIRE AND SMOKE. Refer to Figure 9 for correct door positions.

Do not close the glass doors on an excessively hot fire. This could remove the temper from the glass, causing it to crack into small pieces. The glass must be allowed to warm slowly. The tempered glass in the doors will withstand a gradual temperature rise to 550 ° F, which is more than a normal fire will create. An excessively hot fire can be created by such things as pitch laden logs, very dry mill end lumber or large amounts of paper or cardboard cartons. Keep the fire well back from the doors and never let flames contact the glass.

Breakage may occur if the glass doors are mishandled. Always use caution when operating the doors and do not slam or force them into position.

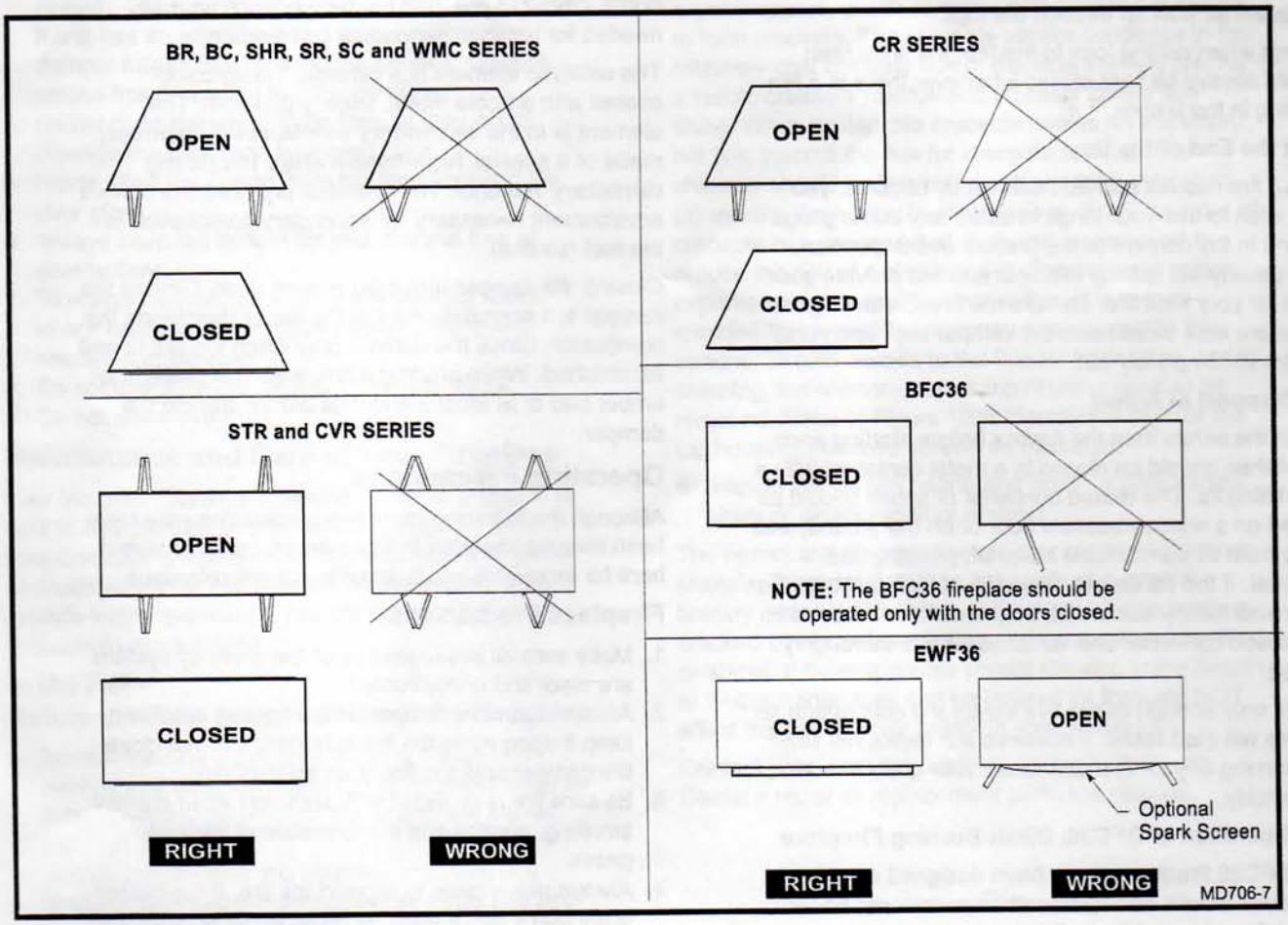

Fig. 9 Top view of glass door operation.

Please note that under moderate firing, some discoloration may occur on brass door frames. Keeping the fire small and toward the back of the fireplace will prevent this discoloration.

7. Operating Fan

If your fireplace is heat-circulating with a fan option, build the fire in the normal manner with the fan(s) 'OFF'. Preheat your firebox and heat exchanger system for 20 - 30 minutes. After a good fire has developed, turn the fan switch to the 'ON' position and heated air will immediately flow from the grille.

8. Tending the Fire

The heat output of a fireplace depends on how well you build and tend the fire. A well-tended fire assures a constant heat output. Keep the fire burning at a constant level by adding additional logs as necessary. Use a poker to push the burning logs together into a tight group at the back of the fireplace each time you add new logs. Keep the bed of hot ashes located directly under the logs. This aids in maintaining the fire, but do not let the ashes get so deep that they interfere with adequate air flow up through the logs.

Except when adding logs to the fire, the firescreen should always be kept closed whenever there is a fire burning in the firebox.

9. At the End of the Day

If your fire has not burned itself out by bedtime, you may wish to use your tongs to stand any burning logs on end in the corners of the firebox. In this position, they usually will quickly burn out and will provide good base for your next fire. Be sure the firescreen or glass doors are kept closed and the damper kept open until the fire is completely out.

10. Disposal of Ashes

Clean the ashes from the firebox before starting each fire. Ashes should be placed in a metal container with a tight fitting lid. The closed container of ashes should be placed on a noncombustible floor or on the ground, well away from all combustible material, pending final disposal. If the ashes are disposed of by burial in soil or otherwise locally dispersed, they should be retained in the closed container until all cinders have thoroughly cooled.

Leave only enough ashes to insulate the cold hearth so the fire will start faster. Excessive ash levels will slow the burning of your fire and cause your grate to burn out quickly.

11. Operation of BFC36, Clean-Burning Fireplace

The BFC36 fireplaces have been designed specifically to reduce smoke and hydrocarbon emissions; however, the performance of these fireplaces depends on proper operation. In order to reduce emissions use only well seasoned firewood. Avoid slow burning smoldering fires and maintain a hot coal bed on which to place new wood.

High firebox temeratures help to ensure effective operation of these clean-burning models.

The BFC36 clean-burning fireplaces must be burned with the cabinet doors fully closed in order to reduce emissions. Any modifications to the internal components of these fireplaces will likely cause an increase in emissions. Always use the correct model grate and do not remove any brick components, baffles or hardware from the firebox.

12. Operation of EWF36 fireplace.

The EWF36 meets the US Environmental Protection Agency's emission limts for wood heaters sold after July 1, 1990.

The catalytic combustion system in your EWF produces the best conditions for secondary combustion.

When the stove damper is closed, smoke goes through the **catalytic element**, burning at temperatures of 500-600°F (260-315 °C), half the temperature normally needed for unaided secondary combustion.

The catalytic element is a ceramic "honeycomb" coated with a noble metal, usually platinum. The element is in the **secondary combustion chamber**, made of a special **high-temperature insulating refractory** material. The chamber provides the correct environment necessary for secondary combustion of the fuel (smoke).

Closing the damper may also reduce draft. Closing the damper too soon may put out the fire or deactivate the combustor. Close the damper only when the fire is well established. When starting a fire, wait until there is an ember bed of at least 3-4 inches before closing the damper.

Operating Precautions

Although the following operation precautions may have been discussed earlier in this manual, they are stated here for emphasis and to provide a quick reference.

Fireplace Precautions

1. Make sure all passageways of the chimney system are clear and unobstructed.
2. Always open the damper before lighting a fire and keep it open while the fire is burning. Do not close the damper until the fire is completely out.
3. Be sure fire is provided with sufficient air to prevent smoking, sooting and the formation of harmful gases.
4. Always use a grate to support the fire. If the basket grate burns out, it must be replaced by an approved grate from Vermont Castings, Majestic Products. Refer to replacement models on Page 11.

5. Never burn scrap lumber, pine branches, trash, plastics, flame colorants, soot cleaners or other chemicals or compounds.
6. Never use liquid fuels or liquid fire starters.
7. Build your fire within approximately 1/2 inch of the back of the firebox for good burning.
8. Always use care when adding wood to the fire and when using fireplace tools (shovels, tongs, pokers, etc.).
9. The first few fires should be small.
10. Do not overfire your fireplace.
11. Always keep the fireplace screens completely closed while the fire is burning.
12. Never place any combustible objects (furniture, pillows, etc.), closer than 24 inches from fireplace (28 inches for WMC36/WMC42 and 32 inches for SHR48).
13. Never let anything obstruct the air inlet/outlet grilles.

Glass Door Precautions

1. Always start the fire with the doors open.
2. When the doors are open, the screens must be closed.
3. If unit has an adjustable flue damper, open flue damper fully before opening the doors to prevent smoke from escaping into the dwelling.
4. Do not build extremely large fires as they could damage the finish and tempered glass.
5. Never allow the flames from the fire to contact the door glass.
6. Always keep the bottom air inlet channel free of obstructions.
7. To prevent discoloration on brass finished doors, check finish for a protective plastic coating and remove if applicable.
8. Do not use abrasive cleaners on glass doors.
9. Do not clean while hot.

Maintenance and Care of Your Fireplace

Your Vermont Castings, Majestic Products fireplace is built to operate trouble-free with little need for extensive time-consuming maintenance. As with any such piece of equipment, your fireplace will operate better and provide longer service if a few basic housekeeping procedures are followed.

In the Fall - Before the First Seasonal Use of the Fireplace

1. Inspect the roof in the area of the chimney and remove any obstructions or foreign material such as hanging tree limbs, broken tree branches, leaves, etc.
2. Inspect the chimney top housing, removing any foreign obstructions from cooling air inlets and bird guard screen.

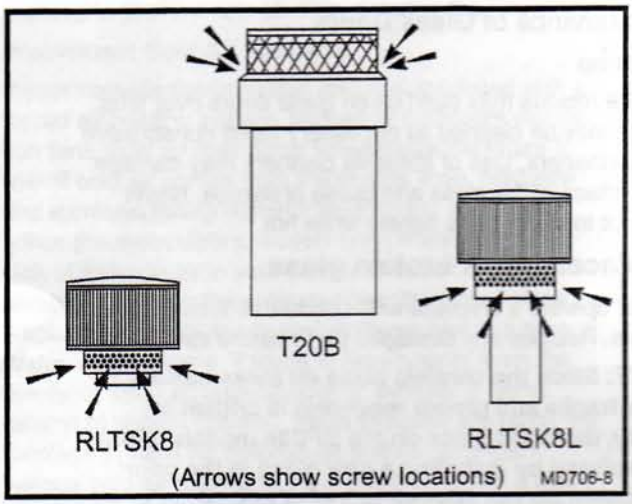

Fig. 10 Chimney cap removal.

3. Inspect the flue for obstructions and foreign material and remove them if any are found.
4. Creosote - Formation and Need for Removal

When wood is burned slowly, it produces tar and other organic vapors, which combine with expelled moisture to form creosote. The creosote vapors condense in the relatively cool chimney flue of the slow burning fire. As a result, creosote residue accumulates on the flue lining. When ignited this creosote makes an extremely hot fire. Inspect the flue for creosote buildup. The chimney should be inspected at least once every two (2) months during the heating season. If 1/8" or more of creosote has accumulated, it should be removed to reduce the risk of a chimney fire. Special tools and expertise are required to clean a flue. It is recommended that a qualified chimney sweep provide this service. To gain access to the flue for inspection, and/or cleaning, the chimney cap or top housing need to be removed. Refer to Figure 10 to identify the style of the top housing. Remove screws as indicated.

5. Inspect the firebox hearth and firebrick liner for any unusual deterioration or erosion.

The hearth and firebrick liner of your Vermont Castings, Majestic Products fireplace are made of a special fireclay material. While it is quite sturdy, it can become cracked by normal expansion and contraction from heat or abuse. If hairline cracks should develop in the hearth or firebrick liner, they can be ignored as they will NOT affect the operation or safety of your fireplace.

Contact your Vermont Castings, Majestic Products Dealer if repair or replacement parts are needed.

Maintenance of Glass Doors

Cleaning

Smoke residue may build up on glass doors over time. Doors may be cleaned as necessary using nonabrasive glass cleaners. Use of abrasive cleaners may damage the surface of the glass and cause breakage. Never attempt to clean glass panels while hot.

Replacement of broken glass

Never operate a fireplace with cracked or broken glass panels. Replace any damaged parts before use.

NOTE: Since the ceramic glass on these models is quite fragile and proper mounting is critical for safety, damaged glass on the BFC36 models should be replaced by installing a new glass in the door assembly. Do not attempt to install new glass in the door frames. Remove the entire door assembly by removing the four (4) screws securing the door hinges to the fireplace. Replace with a new door assembly. Contact your nearest Vermont Castings, Majestic Products Dealer for replacement parts.

Before Each Use of the Fireplace

1. Inspect the firebox to be sure it is clean and ready for use. Remove excessive ashes.
2. Make sure your firescreen and air inlet/outlet grilles are clean and unobstructed.
3. Inspect the hearth and firebox liner for cracks or damage. Make sure flue is unobstructed and damper is completely open.

In the Spring - After Last Seasonal Use of the Fireplace

1. Inspect the chimney top housing, removing any foreign obstructions.
2. Inspect the flue for obstructions and remove them if any are found.
3. Inspect completely the chimney top for corrosion, replacing any structurally weakened parts.
4. Inspect the chimney flashing. This is the first place to look if you are having any roof leakage problem. Check for ruptured areas such as nail heads and seams. Seal any area found.
5. Clean the complete fireplace.

Replacement Parts

Replacement parts for your Vermont Castings, Majestic Products fireplace can be obtained from your Vermont Castings, Majestic Products Dealer. For information on replacement parts that are available, refer to installation and homeowner's manual provided with each accessory. Should you need additional information beyond what your dealer can furnish, contact:

Vermont Castings, Majestic Products
410 Admiral Blvd.
Mississauga, Ontario Canada L5T 2N6
Attention: Technical Services

Troubleshooting Guide

Your Vermont Castings, Majestic Products fireplace is designed, safety tested and manufactured for trouble-free operation. Due to atmosphere, home environment and improper operating procedures, you may encounter the following common situation(s) that you can remedy yourself. If your situation cannot be corrected, contact your local Vermont Castings, Majestic Products Dealer for assistance.

Smoking Problems

Smoking occurs when fire is started

Your chimney and flue are probably cold. Place a piece of newspaper on the top log and start burning just before you start your crumpled up paper and kindling. This newspaper will burn rapidly, warming up the flue faster.

Smoking is constant

Your damper may be closed. Check damper and make sure damper is in the open position. If your fireplace is equipped with an adjustable damper, WMC Series, check damper setting. In some cases, the lowest damper setting will reduce the flue draft and smoking will occur. Open damper until smoke discontinues.

You may have an obstruction in your flue or debris in or on chimney top. Check for obstruction and remove. If you fail to inspect your chimney flue as recommended, creosote buildup may have reduced the flue area. Check chimney flue as described in maintenance procedure.

Your fire may be too far forward in the firebox. Push your fire toward the back of firebox with a suitable tool If a basket grate larger than the Vermont Castings Majestic Products Company supplied or recommended size is used, smoking would occur. Replace basket grate with model specified and listed on Page 11.

You may not be using a grate to keep your fire up off the hearth. This is important to get the proper draft. Let the fire die out and rebuild per previous instructions. Your chimney top may not be high enough above your roof. It may be necessary to increase the height of your chimney top. Contact your dealer for chimney top extension and other parts needed. See your chimney top installation instructions.

Smoking Occurs After the Fire has been Burning for Some Time

In fueling and tending the fire, your fire may have worked forward in the firebox. Push your fire toward the back of the firebox with a suitable tool.

If your home is tightly sealed and well insulated, the lack of sufficient combustion air will cause a smoking condition. If your fireplace is equipped with outside air, check and make sure air control is open. If your fireplace is not equipped with outside air, slightly open a door or window. In either case smoking should discontinue. Since the optional outside air system is very difficult to add after initial installation is completed, the solution would be to add a fresh air vent to the home or continue to open a door or window.

If your home is tightly sealed and equipped with a forced air heating system, kitchen and/or bathroom ventilation fans, smoking may occur only when these items are in use. Slightly open a door or window when system(s) is running. If smoking stops, your problem is insufficient makeup air in the home. These systems are using the open fireplace flue to meet their air needs. As a solution, install a fresh air vent in the room or area requiring the most replacement air. A qualified heating contractor can help you.

Smoking is Intermittent When the Wind is Coming from a Certain Direction or is Blowing Hard

You probably are experiencing a downdraft situation in your chimney. This situation can be caused by the chimney top being too low or nearby obstructions such as buildings, trees or even a high portion of your home. In some cases a wind deflector can be added to the rain cap, or it may be necessary to increase the height of your chimney top. Contact your dealer for the necessary facts and installation instructions.

Cold Air Problems

Cold air problems are normally attributed to home environment and/or improper installation procedures. Should cold air occur, check the following common situations:

Cold Air Coming From Firebox Opening

Inspect the flue damper to assure damper is sealed in the closed position.

If your fireplace is equipped with optional outside air, inspect the damper control to assure damper is closed.

If your fireplace is enclosed in an exterior enclosure (chase), the outer wall and inner wall above the fireplace should be insulated. If not, cold air may transfer through fireplace constructions causing a cold draft. If insulation is not present, contact your local Vermont Castings Majestic Products Company dealer for proper insulating procedure.

Cold Air Present at Fireplace and Surround Facing

If noncombustible materials (brick, stone, marble, tile, etc.) are used to finish fireplace face, inspect area between fireplace and facing material for gaps. If gaps appear, area must be sealed with a noncombustible material to prevent cold air from entering the room.

Intermittent Cold Air Problems

If your home is tightly sealed and well insulated with a forced air heating system, kitchen or bathroom ventilation fans, cold air may occur when these items are in use. If cold air comes from the firebox area, fireplace and surround facing material area and/or inlet/outlet grilles (heat-circulating models only) there may be a lack of makeup air in your home. To check, place a burning candle on the extended hearth in front of the fireplace. Turn **ON** the forced air items one at a time. Watch candle flame. If flame is drawn away from the fireplace, open an outside door or window. If flame returns to upright position, these systems are using the fireplace system for makeup air and causing the various cold air situations. As a solution, install a fresh air vent in the room or area requiring the most replacement air. A qualified heating contractor can help you.

Catalytic Combustor Problems

When to Suspect a Combustor Problem

The best way to evaluate the performance of your EWF36's combustor is to observe the amount of smoke leaving the chimney - both when the combustor has "lighted-off" and when it has not. Follow these steps:

- With a fire going and the combustor properly activated, with the damper closed to route smoke through it as described in the Operation Section, go outside and observe the smoke leaving the chimney.
- Then, open the stove damper and once again check the smoke leaving the chimney.

You should see significantly more smoke when the stove damper is open and exhaust does not pass through the combustor. However, be careful not to confuse smoke with steam from wet wood. Steam dissipates in the air quickly; smoke does not.

If this test indicates a problem, consider other possible factors as well, such as the weather or a change in the quality of your fuel. In warm weather, draft is weaker than it is in colder winter weather and fires can burn sluggishly. Small, hot fires are a good solution under these conditions.

Burning "green" (insufficiently seasoned) wood will result in poorer performance than burning properly seasoned fuel. You may have to run your fireplace hotter (more air) to achieve acceptable performance using green or wet wood.

Also consider any changes in your operating routine.

Once you have ruled out any other possible causes for a decline in performance, inspect and clean the combustor if necessary.

Accessories for Woodburning Fireplaces

The following accessory parts can be obtained from your Vermont Castings, Majestic Products Dealer. Should you need additional information, beyond what the dealer can furnish, contact Vermont Castngs, Majestic Products 410 Admiral Blvd., Mississauga, Ontario, Canada L5T 2N6 Attention: Technical Services.

Woodburning Models	Outside Air	Fan Kit	Glass Door Kit	Chimney System	Flue Dia.	Basket Grate
BC36, BC36i	AK-MST	FK12	36GDKBB 36GDKBK 36GDKDP 36GDKS	SK8 or S	8"	3030129
BR36, BR36i	AK-MST	N/A	36GDKBB 36GDKBK 36GDKDP 36GDKS	SK8 or S	8"	3030129
BC42, BC42i	AK-MST	FK12	42GDKBB 42GDKBK 42GDKDP 42GDKS	SK8 or S	8"	3030129
BR42, BR42i	AK-MST	N/A	42GDKBB 42GDKBK 42GDKDP 42GDKS	SK8 or S	8"	3030129
SC36	AK-MST	FK12	36GDKBBSR 36GDKBKSR 36GDKDPSR 36GDKSSR	SK8 or S	8"	3041130
SR36	AK-MST	N/A	36GDKBBSR 36GDKBKSR 36GDKDPSR 36GDKSSR	SK8 or S	8"	3041130
SC42	AK-MST	FK12	42GDKBBSR 42GDKBKSR 42GDKDPSR 42GDKSSR	SK8 or S	8"	3041130
SR42	AK-MST	N/A	42GDKBBSR 42GDKBKSR 42GDKDPSR 42GDKSSR	SK8 or S	8"	3041130
STR33	AK-MST	N/A	33GDKBB 33GDKBK 33GDKDP 33GDKS	SK8 only	8"	2056100
STR36, CVR36	AK-MST	N/A	36GDKBB 36GDKBK 36GDKDP 36GDKS	SK8 only	8"	2056100
STR42, CVR42	AK-MST	N/A	42GDKBB 42GDKBK 42GDKDP 42GDKS	11CF only	11"	2003212
SHR36	AK-MST	N/A	36SHGDKBB 36SHGDKBK 36SHGDKDP 36SHGDKS	11CF only	11"	20004203
SHR42	AK-MST	N/A	42SHGDKTBB 42SHGDKTBK 42SHGDKTDP 42SHGDKTS	11CF only	11"	20004203
SHR48	AK-MST	N/A	48SHGDKBB 48SHGDKBK 48SHGDKDP 48SHGDKS	11CF only	11"	20004311

(1) 'SK' 2-WALL SYSTEM W/11" O.D.
'CF' 2-WALL SYSTEM W/13-1/2" O.D.
'S' 3-WALL SYSTEM W/13-1/2" O.D.

Accessories for Woodburning Fireplaces (continued)

Woodburning Models	Outside Air	FAn Kit	Glass Door Kit	Chimney System	Flue Dia.	Basket Grate
SHR52	AK-MST	N/A	52SHGDKBB 52SHGDKBK 52SHGDKDP 52SHGDKS	11CF only	13⅜"	20005762
WMC36	STD	STD	STD	S & SK8	8"	RSBG36
WMC42	STD	STD	STD	S & SK8	8"	RSBG36
CR36L, CR36R	AK-MST	N/A	36GCKBB	SK8 only	8"	RBGC36L or R
BFC36	AK-MST	FKSX-A	STD	S only	8"	RBGBFC36
EWF36	AK-MST	FK26	STD	S only	13½"	N/A

(1) 'SK' 2-WALL SYSTEM W/11" O.D.
'CF' 2-WALL SYSTEM W/13-1/2" O.D.
'S' 3-WALL SYSTEM W/13-1/2" O.D.

Warranty Matrix

Woodburning Fireplace Systems (commences on date of installation)

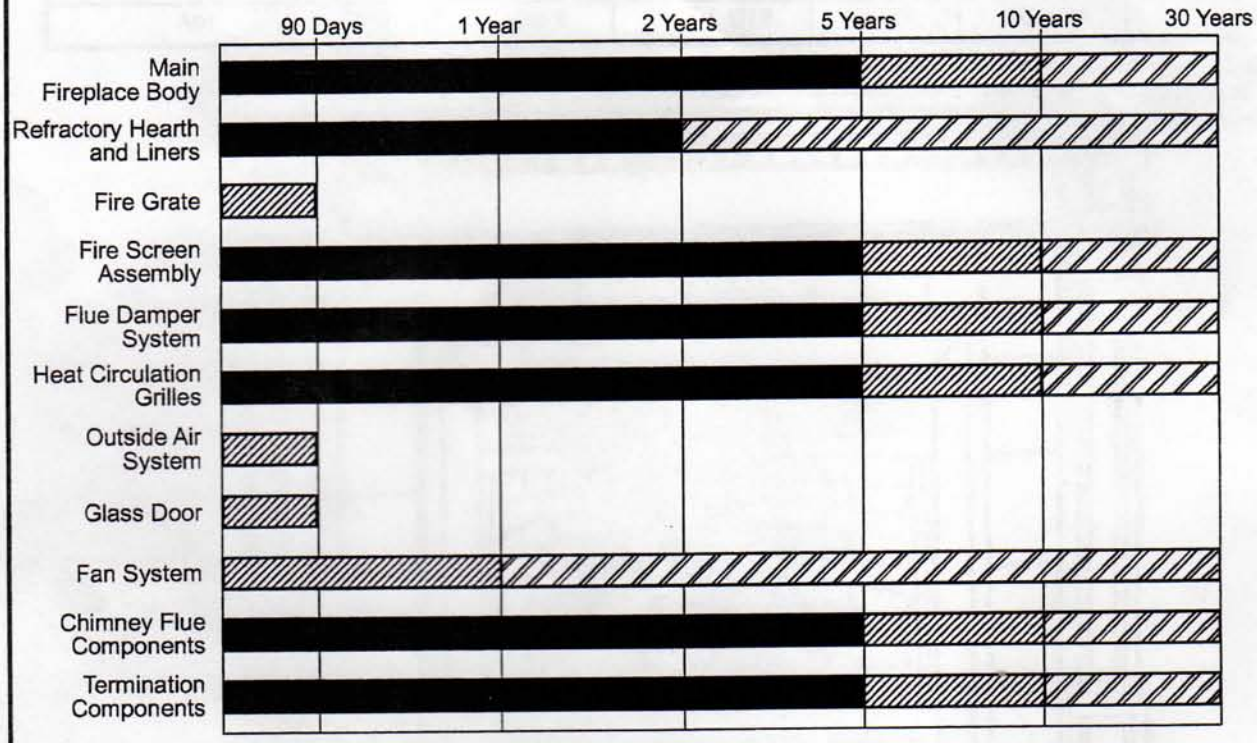

NOTE: For EWF36 Warranty information, refer to installation instructions supplied with fireplace.

LEGEND: Parts and Labor | Parts ONLY/NO Labor | Parts if Available

Vermont Castings, Majestic Products

410 Admiral Blvd. • Mississauga, Ontario, Canada L5T 2N6 • 905-670-7885
www.majesticproducts.com • www.vermontcastings.com