➡ GAS-FIRED

C UL US LISTED

heatilator®

The first name in fireplaces

Hearth & Home Technologies Inc.
1915 W. Saunders Street
Mt. Pleasant, Iowa 52641
Division, HON INDUSTRIES
www.heatilator.com

INSTALLATION & OPERATING INSTRUCTIONS

CALIBER DESIGNER
B-VENT SERIES

(GBFL36 shown)

WARNING: If the information in this manual is not followed exactly, a fire or explosion may result causing property damage, personal injury or loss of life.

— Do not store or use gasoline or other flammable vapors and liquids in the vicinity of this or any other appliance.

— What to do if you smell gas

- Do not try to light any appliance.
- Do not touch any electrical switch; do not use any phone in your building.
- Immediately call your gas supplier from a neighbor's phone. Follow the gas supplier's instructions.
- If you cannot reach your gas supplier, call the fire department.

— Installation and service must be performed by a qualified installer, service agency or the gas supplier.

CAUTION:
Do not expose the appliance to the elements (such as rain, etc.).

Note: An arrow (➡) found in the text signifies change in content.

WARNING!
Improper installation, adjustment, alteration, service or maintenance can cause injury or property damage. Refer to this manual. For assistance or additional information, consult a qualified installer, service agency or the gas supplier.

Table of Contents

Design and Installation Considerations 3
A. Appliance Specifications 4
B. Location and Clearances 6
C. Framing 7
D. Setting the Appliance 7
E. Venting 8
F. Utilities 10
G. Finishing 13
H. Ignition 15
I. Lighting Instructions 15
J. Seasonal Checklist 17
K. Start-up Issues 18
L. Maintenance instructions 19
M. Optional Components 21
N. Replacement Parts 22
Index 23
Warranty 24

WARNING!

DO NOT use this appliance if any part has been under water. Immediately call a qualified service technician to inspect the appliance and to replace any part of the control system and any gas control which has been under water.

Safety Precautions

1. Please read these installation instructions completely before beginning installation procedures. Failure to follow them could cause an appliance malfunction resulting in serious injury and/or property damage.
2. Always check your local building codes prior to installation. This installation must comply with all local, regional, state and national codes and regulations.
3. Installation and repair should be done by a qualified service person. This appliance should also be inspected annually by a qualified service person. More frequent inspections/cleaning may be required due to excessive lint from carpeting, bedding materials, etc. It is imperative that the control compartment, burners and circulating air passageways of the appliance be kept clean.
4. This is a vented decorative gas appliance. Do not burn wood or other material in this appliance.
5. **NEVER** leave children unattended when there is a fire burning in the appliance.
6. This appliance may only use the approved B-vent system shown in these installation instructions. Venting **must not be connected** to chimney flue servicing a solid fuel burning appliance or a gas fuel burning appliance.
7. Use only the fuel gas specified on the rating label of this gas appliance.
8. The appliance area shall be kept clear and free from combustible materials, gasoline and other flammable vapors and liquids.
9. While servicing this appliance, always shut off all electricity and gas to the appliance. This will prevent possible electrical shock or burns. Also, make sure the appliance is completely cooled before servicing.
10. Do not use this appliance if any part has been under water. Immediately call a qualified service technician to inspect the appliance and to replace any part of the control system and any gas control which has been under water.
11. Be sure to provide adequate clearances around the air openings into the combustion chamber and adequate accessibility clearances for servicing and proper operation.
12. Provisions shall be made to provide adequate combustion and ventilation air. The flow of combustion and ventilation air should not be obstructed.

The first name in fireplaces

DESIGN AND INSTALLATION CONSIDERATIONS

When selecting a location for your B-Vent appliance, it is important to evaluate a number of considerations. Modern construction techniques can create conditions that may not allow your vent to draft properly. This may result in spillage from your B-Vent appliance, as well as cause other combustion appliances to operate incorrectly.

Tightly sealed construction is important for energy efficiency. Unfortunately, a great deal of effort has been directed to tightening up sidewall construction, while considerably less attention has been paid to tightening upper portions of the warm air envelope (insulated ceilings). This has increased the “Stack Effect”, a condition that increases the negative pressure generated by the structure. This negative pressure will directly affect the drafting performance of a B-Vent appliance vent. To minimize the negative pressure generated by stack effect, make certain that all duct work installed in the attic spaces is sealed airtight. Minimize the number of recessed light fixtures installed in the insulated ceiling and use sealed recessed light fixtures. Finally, make certain the whole house fans and attic access panels are tightly sealed. These are important design considerations that must be observed during the design and construction stage of the home.

If you desire to put an appliance in your basement, we recommend that you consider a direct vent gas appliance. Basements always have a significant negative air pressure that causes the B-Vent system to be more susceptible to spillage and cold flue back drafting. Since direct vent gas appliances are sealed, they are not affected by the negative pressure that exists in basements.

Finally, a B-Vent appliance performs best when the vent (roof termination) is located on the upper half of the roof, especially when cathedral ceilings are present. Vents that are located on the lower half of the roof realize what is known as “lazy flue” and will not draft as well as a vent that is located in the upper portion of the roof. The reason for this is that the stack effect generated by the overall height of the living spaces inside the house will exceed the draft generated by the vent system. If you desire to place an appliance in a location where the termination cap would be located on the lower half of a roof; such as on an outside wall at the base of a cathedral ceiling, we recommend that you consider using a direct vent gas appliance. This will ensure an appliance that operates correctly.

These properties do not affect just your B-Vent appliance. They can cause any woodburning appliance as well as any conventionally vented (B-Vent) gas appliance to operate improperly. Careful planning at this stage of your project will ensure satisfaction with the operation of your appliance once it is completed.

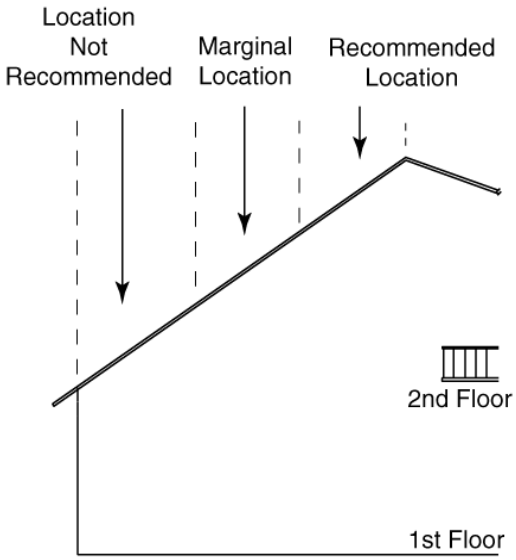

Cathedral Ceiling
Construction

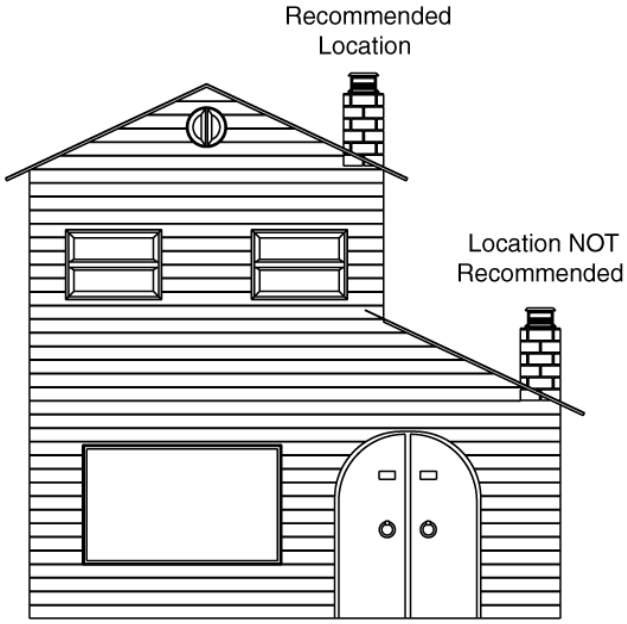

Multi-level Roofs

The first name in fireplaces

A. APPLIANCE SPECIFICATIONS

1. U.S. and Canada Certification

The Caliber Designer B-Vent Series gas appliance has been tested in accordance with the **ANSI standard Z21.50-2000 (Decorative);** in Canada, the current **CAN/CGA M2.22-2000, IR41, P4, and IR55** and has been LISTED by Underwriters Laboratories Inc. for installation as described in this manual. All components are UL or AGA safety certified.

2. Local Codes

This installation must conform with local Codes. In the absence of local Codes comply with the **National Fuel Gas Code ANSI Z223.1-latest edition** in the U.S.A., and the CAN/**CGA B149 Installation Codes** in Canada.

If you need assistance during installation contact your local dealer or Heatilator Technical Services Department, Hearth & Home Technologies Inc., 1915 W. Saunders Street, Mt. Pleasant, Iowa 52641, 1-800-927-6841.

HEATILATOR® is a registered trademark of Hearth & Home Technologies Inc., a Division HON Industries.

3. Glass Certification and Specifications

Heatilator gas appliances manufactured with tempered glass may be installed in hazardous locations such as bathtub enclosures as defined by the CPSC. The tempered glass has been tested and certified to the requirements of **ANSI Z97.1-1984 and CPSC 16 CFR 1202. (Safety Glazing Certification Council SGCC# 1595 and 1597. Architectural Testing, Inc. Reports 02-31919.01 and 02-31917.01.)**

This statement is in compliance with **SPCS 16 CFR Section 1201.5** "Certification and labeling requirements" which refers to **15 USC 2063** stating "…Such certificate shall accompany the product or shall otherwise be furnished to any distributor or retailer to whom the product is delivered."

Some local building codes require the use of tempered glass with permanent marking in such locations. Glass meeting this requirement is available from the factory. Please contact your dealer or distributor to order.

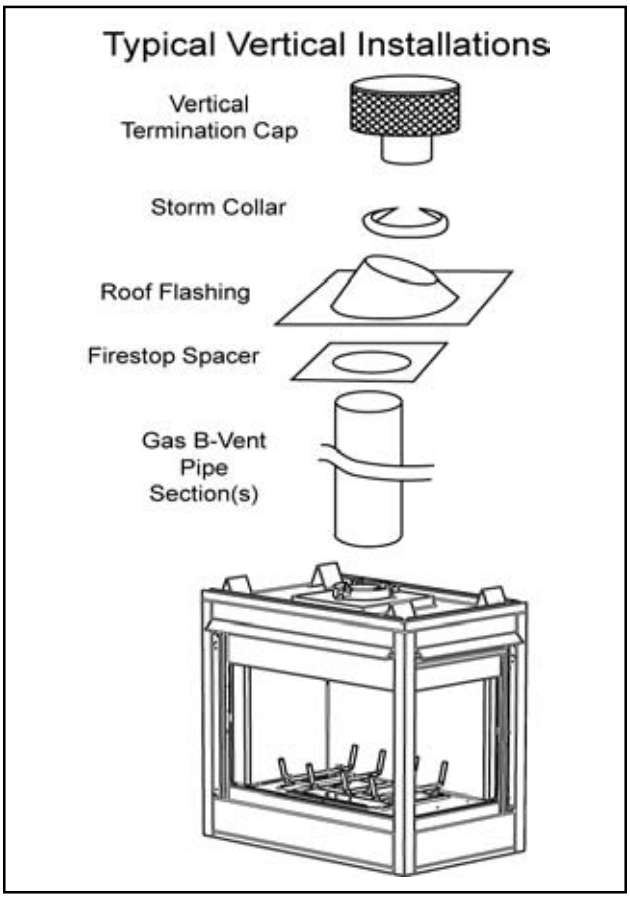

We strongly recommend that you DO NOT install B-Vent Gas Appliances in strong negative air locations, such as a basement or a public facility. Living rooms with cathedral ceilings could be susceptible to a negative air situation, but such installations can be overcome through raising the termination, depending on specific installations. This appliance uses room air for normal operation and could have problems establishing a positive draft in a negative air location. In lieu, we recommend a Direct Vent Gas Appliance.

WARNING!

This appliance is tested and listed for use only with the optional accessories listed in these instructions. Use of optional accessories not specifically tested for this appliance could void the warranty and/or result in a safety hazard.

The first name in fireplaces

Note: Minimum and maximum clearances must be maintained at all times. Illustrations throughout these instructions reflect typical installations and are for design purposes only. Actual installation may vary slightly due to individual design preferences.

The illustrations and diagrams used throughout these installation instructions are not drawn to scale.

Tools and building supplies normally required for installation:

Tools:
Saw
Pliers
Hammer
Phillips Screwdriver
Tape measure
Plumb Line
Level
Electric Drill/Bits
Framing Square
Safety Gloves

Building Supplies:
Wall-finishing materials
Framing material
Appliance Surround
Caulking material

Caliber Designer Nomenclature

Catalog #	Description
GBST36	See-through, standing pilot, natural gas appliance
GBFL36	Peninsula, standing pilot, natural gas appliance
GBCR36	Corner Right, standing pilot, natural gas appliance
GBCL36	Corner Left, standing pilot, natural gas appliance
GBIS36	Island, standing pilot, natural gas appliance
The following suffixes are defined as follows:	
no suffix	Standing Pilot, Natural Gas
L	Standing Pilot, Propane Gas
I	Intermittent Pilot Ignition, Natural Gas
IL	Intermittent Pilot Ignition, Propane Gas
Example:	GBST36IL is a See-Through, intermittent pilot ignition, propane gas appliance.

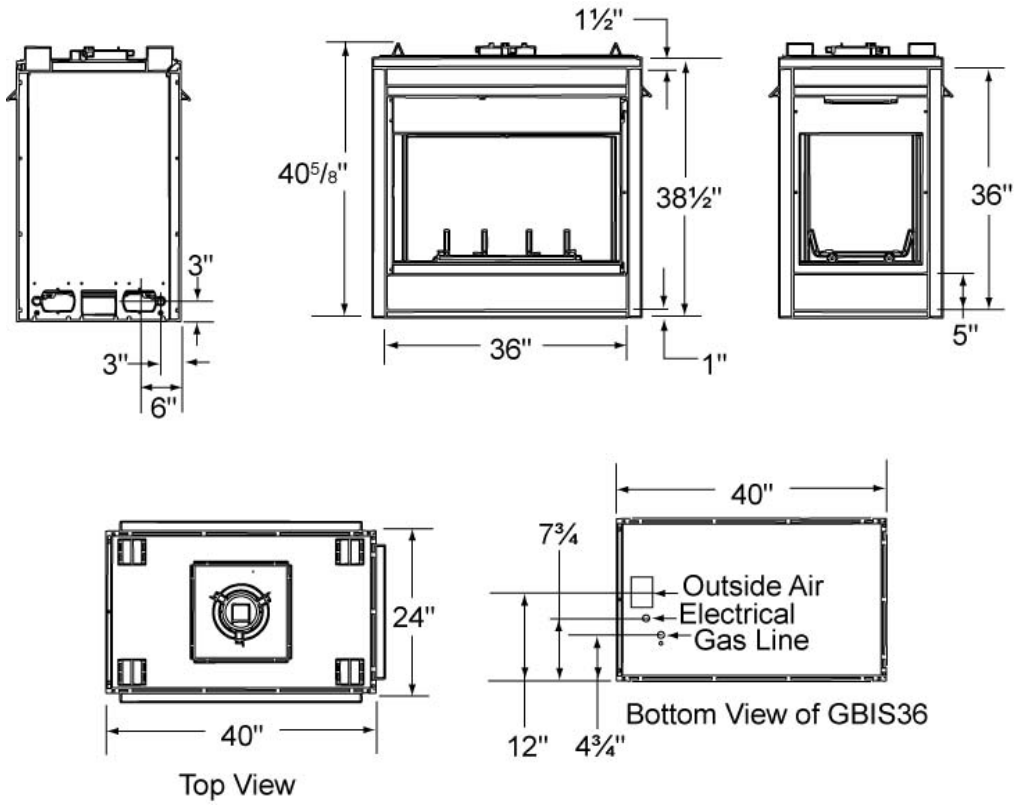

Appliance Dimensions

The first name in fireplaces

B. LOCATION AND CLEARANCES

WARNING!
Due to high temperatures, the appliance should be located out of traffic and away from furniture and draperies.

1. Appliance Locations and Space Requirements

Figure 1 illustrates a variety of ways the appliance may be located in a room. The Caliber Designer Series may be installed directly on the floor or raised on a hearth. These appliances are certified for installation in a bedroom, bed/sitting room or bathroom in the U.S. and Canada, provided that the bedroom or bathroom has a volume of at least 1700 cubic feet.

Common venting of this gas appliance with other gas appliances is not allowed in multifamily dwellings.

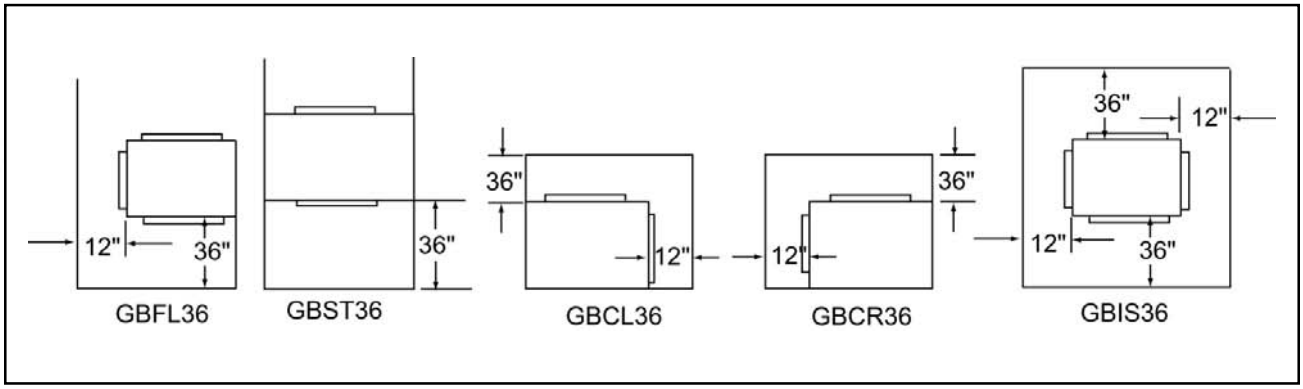

Figure 1
Appliance Locations and Clearances

2. Clearances

Figure 2 shows venting clearances that must be maintained through the floor or ceiling.

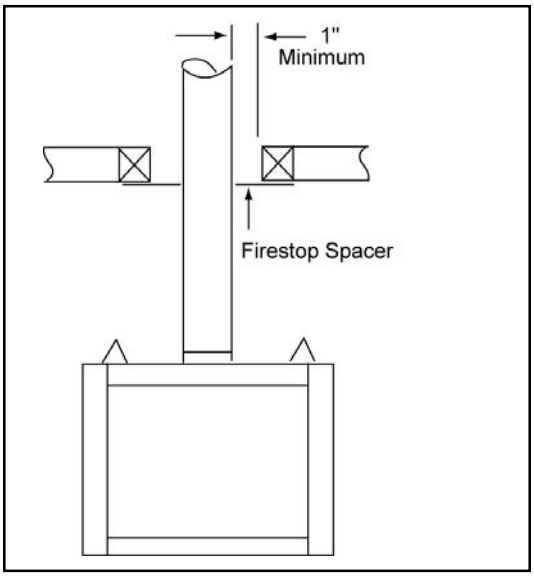

Figure 2
Venting Clearances to Combustible Materials

3. High Altitude Installation

For U.S. installation, appliances are tested and approved for elevations from 0-2000 feet. When installing this appliance at an elevation above 2000 feet, United States codes require a decrease of the input rating by changing the existing burner orifice to a smaller size. Input should be reduced 4% for each 1000 feet above sea level. Check with the local gas utility for proper orifice size identification.

For Canada, appliances are certified for elevations from 0-4500 feet. When installing this appliance at an elevation between 0-4500 feet in Canada, the input rating does not need to be reduced. When installing this appliance at an elevation above 4500 feet in Canada, check with local authorities.

CAUTION:
Wear gloves and safety glasses for protection.

The first name in fireplaces

C. FRAMING

Figure 3 shows a typical framing of this appliance using combustible materials. All required clearances to combustibles must be adhered to.

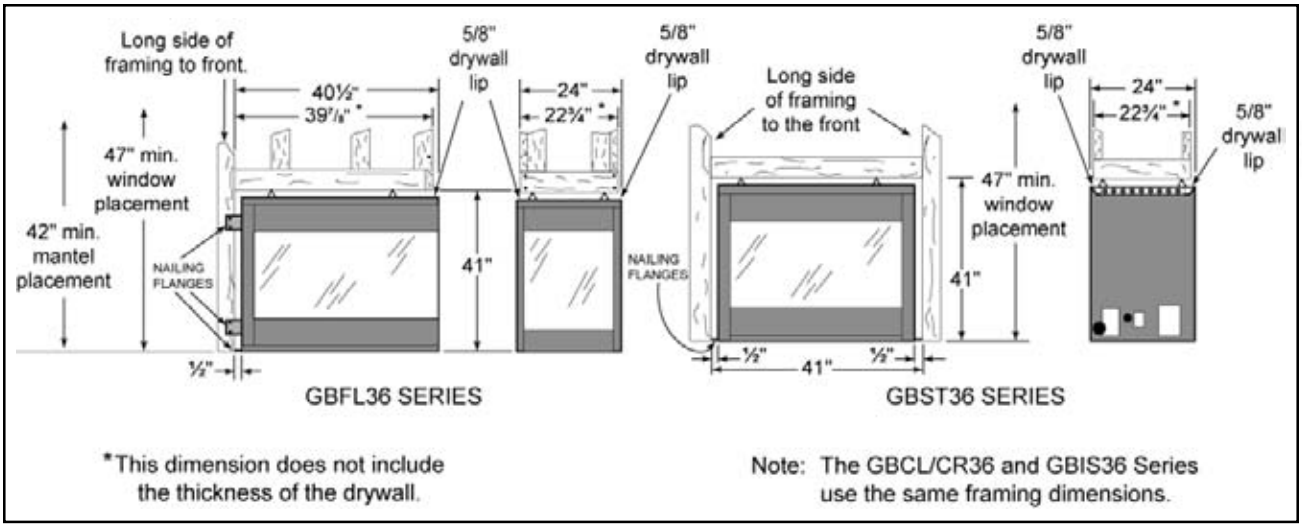

Figure 3 - Framing

D. SETTING THE APPLIANCE

This appliance may be placed on a smooth combustible or noncombustible continuous, flat surface. When the appliance is installed directly on carpeting, tile or other combustible material other than wood flooring, the appliance shall be installed on a metal or wood panel extending the full width and depth of the appliance. Slide the appliance into position and level the appliance from side-to-side and front-to-back. Shim with noncombustible material as necessary.

Secure the appliance by bending out the nailing flanges on each side of the appliance and nail to framing. The nailing flanges have been positioned 5/8" back from the front of the appliance to allow the addition of drywall.

WARNING!

To prevent contact with sagging or loose insulation, the appliance must <u>not</u> be installed against vapor barriers or exposed insulation. Localized overheating could occur and a fire could result.

CAUTION:

Provide adequate clearances around the air openings into the combustion chamber and adequate accessibility clearances for servicing and proper operation.

The first name in fireplaces

E. VENTING

1. Vertical Termination

Note: This appliance is designed and tested for use with a listed 5-inch B-Vent system. **NEVER** downsize pipe.

a. Clearances

Vent clearances are per vent manufacturer's specifications.

b. Vent Lengths

Various venting configurations are shown in Figures 4 and 5 from which maximum vent runs can be determined.

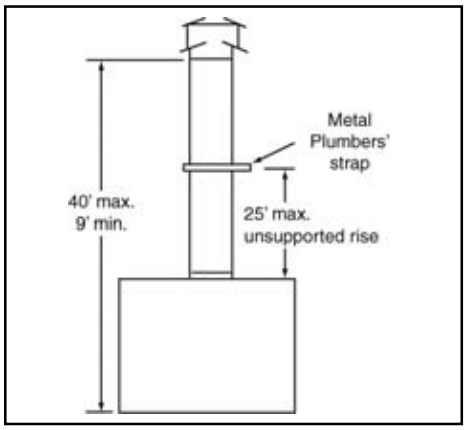

Figure 4 - Vertical Termination Vent Lengths

WARNING - RISK OF FIRE!

Always maintain minimum clearances or greater around the vent system. Do not pack air spaces with insulation or other material.

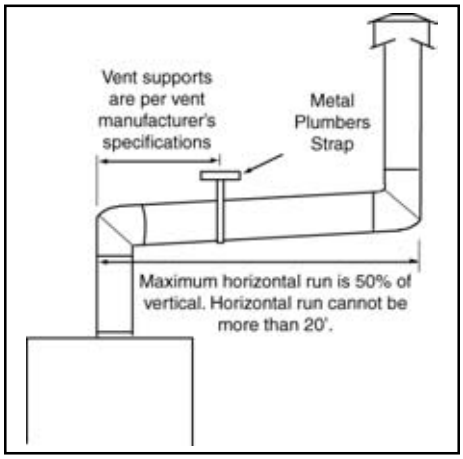

Figure 5 - Vertical Termination Vent Lengths

WARNING!

The horizontal run of vent must have a 1/4" rise for every 1 ft. of run towards the termination. Never allow the vent to run downward. This could cause high temperatures and may present a fire hazard.

2. Firestop Spacer/Vent Installation

Frame an opening and install a firestop spacer whenever the vent penetrates a ceiling/floor area, as shown in Figure 6. Frame the opening with the same sized lumber as used in the ceiling floor joists. Unless the flue is offset, the hole should be directly above the appliance. DO NOT pack insulation around the vent. Assemble vent sections with three screws per joint.

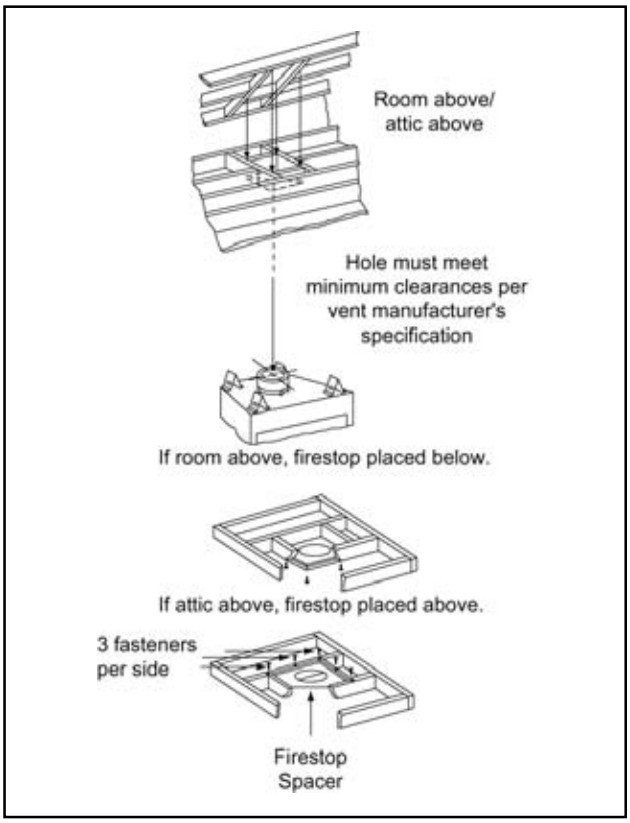

Figure 6
Installing the Firestop Spacer

CAUTION:

Provisions shall be made to provide adequate combustion and ventilation air.

The first name in fireplaces

3. Install the Chase/Termination

Figure 7 and Table 1 specify minimum vent heights for various pitched roofs. Vent sections may have to be cut to a certain length.

These vent heights are necessary for safety and do not ensure draft-free operation. Trees, buildings, adjoining roof lines, adverse conditions, etc. may create a need for a taller vent should down drafting occur.

Table 1

Roof Pitch	H (Min.) Ft.
Flat to 6/12	1.0
6/12 to 7/12	1.25
Over 7/12 to 8/12	1.5
Over 8/12 to 9/12	2.0
Over 9/12 to 10/12	2.5
Over 10/12 to 11/12	3.25
Over 11/12 to 12/12	4.0
Over 12/12 to 14/12	5.0
Over 14/12 to 16/12	6.0
Over 16/12 to 18/12	7.0
Over 18/12 to 20/12	7.5
Over 20/12 to 21/12	8.0

Vent Heights

4. Check the Venting System

Check the venting system to assure proper operation. This can be done with a match while the appliance is operating.

Hold a lighted match at the bottom edge of the draft hood opening. If the flames and smoke remain upright, ventilation is acceptable. If the flames and smoke are drawn into the draft hood, this means ventilation is good. If the flames and smoke are forced away from the draft hood, this may indicate a ventilation blockage or down draft resulting in gas spillage into the home. If this occurs, turn off the appliance and do not burn it until it has been inspected by a qualified service person. See Figure 8.

5. Outside Air Kit Installation

An outside air kit is supplied as an optional feature with this appliance. An outside air kit helps to decrease the amount of room air taken by utilizing outside air for combustion. It is strongly recommended that it be installed.

The outside air kit can be installed only on the left side of the GBST, GBFL and GBCR, on the right side of the GBCL, and on the bottom for the GBIS.

To install the outside air kit, refer to the installation instructions provided with the kit.

Note: The outside air kit can terminate at any level with the exception that it must terminate at least one foot below the vent termination cap. The outside air kit inlet thimble should be positioned at least four feet above the ground level in a manner that will not allow snow, leaves, etc. to block the inlet.

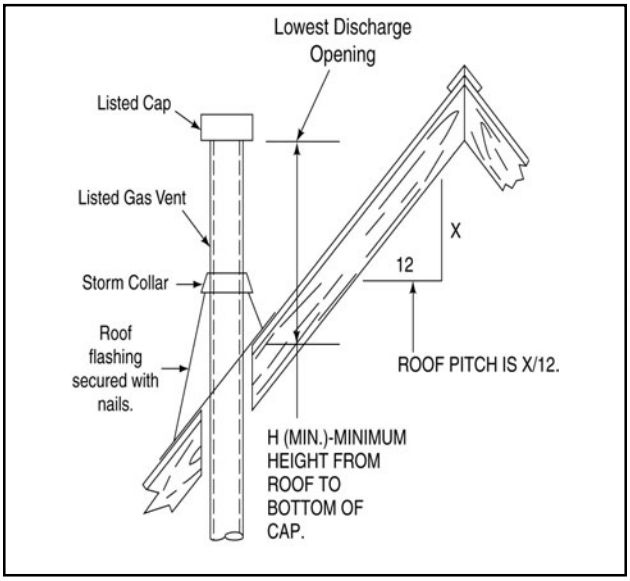

Figure 7 - Vent Height for Vertical Termination

Note: To ensure proper operation, verify all venting and termination is unobstructed.

WARNING!

Exhaust products of gasoline engines are hazardous. The outside air must not be taken from a garage space, attic spaces, basements or above the roofing where other heating appliances, fans or chimneys exhaust or utilize air.

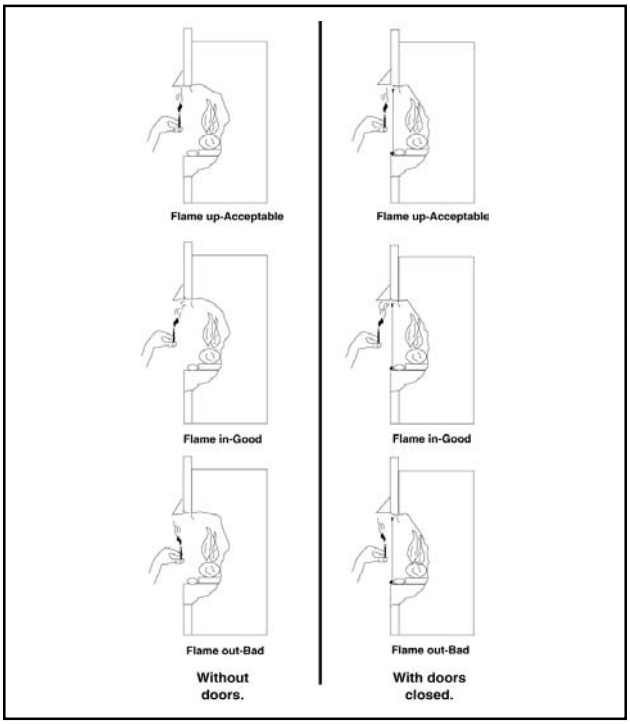

Figure 8 - Testing Ventilation

The first name in fireplaces

F. UTILITIES

1. Gas Line Connection

Open the control access panel as shown in Figures 9 and 10.

The appliance is provided with a stainless steel flexible connector and a listed (and Commonwealth of Massachusetts approved) T-handle manual shutoff valve. The incoming gas line should be piped into the valve compartment and connected to the 1/2" FIP connection provided on the manual shutoff valve. See Figure 11 to connect the gas line. **Optional:** Seal around the gas line to prevent cold air leakage.

➡ All connections must be tightened and checked for leaks with a commercially available, non-corrosive leak check solution. Be sure to rinse off the solution when done leak testing.

Bleed the gas line to extract any air that may have been trapped inside the pipe.

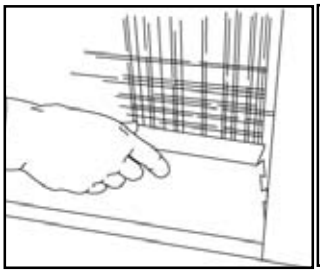

Figure 9 - Opening Control Access Panel

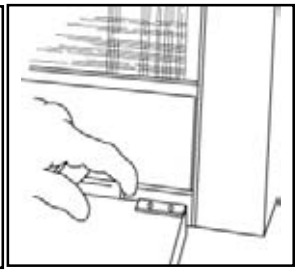

Figure 10 - Removing Control Access Panel

Note: Have the gas supply line installed in accordance with building codes by a qualified installer approved and/or licensed as required by the locality. In the Commonwealth of Massachusetts, installation must be performed by a licensed plumber or gas fitter.

2. Gas Pressure

On the standing pilot and electronic gas control valve, a pressure tap is included on the front face of the valve. Pressure taps are located on the front face of the valve and accessible for test gauge connection.

Table 2 shows optimum gas pressure information.

Consult your local gas company for assistance in determining the proper orifice for your altitude or refer to **ANSI Z223.1-latest edition, Appendix F**.

Note: The appliance and its manual shutoff valve must be disconnected from the gas supply piping system during any pressure testing of that system at test pressures in excess of 1/2 psi (3.5 kPa). The appliance must be isolated from the gas supply piping system by closing the manual shutoff valve during any pressure testing of the gas supply piping system at test pressures equal to or less than 1/2 psi (3.5 kPa).

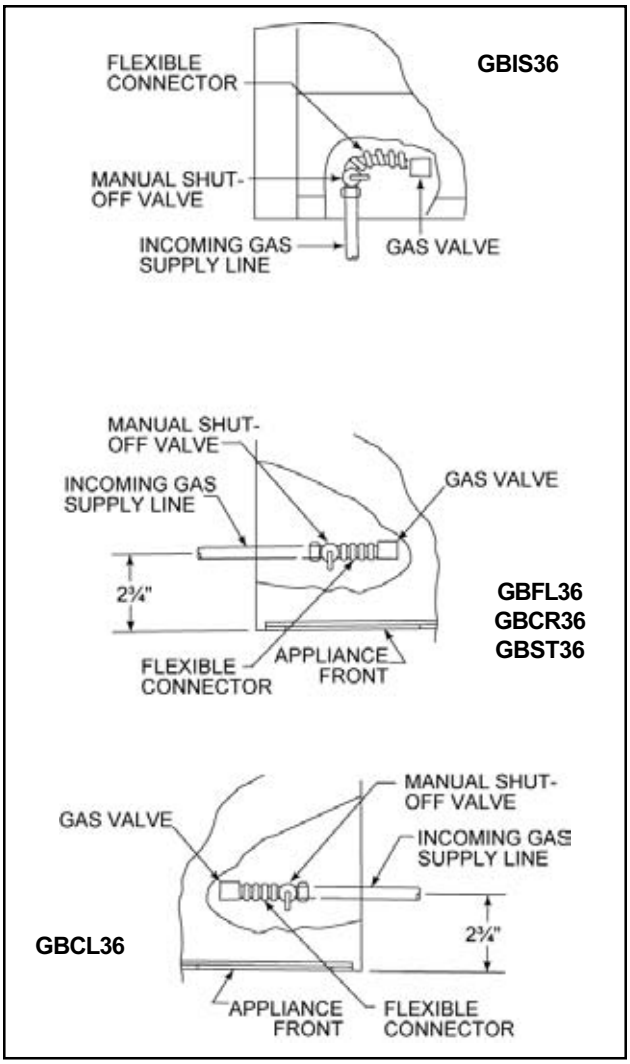

Figure 11 - Gas Line

Table 2

CALIBER	
Inlet gas supply pressure (natural gas)	4.5 (min.)* 7.0 (max.)*
Optimum manifold pressure (natural gas)	3.5*
Inlet gas supply pressure (LP gas)	11.0 (min.)* 14.0 (max.)*
Optimum manifold pressure (LP gas)	10.0*
Input rate (natural gas)	34,000 BTU/hr.
Input rate (propane gas)	30,000 BTU/hr.
Natural Gas Orifice size	.110 in./2.92 mm
Propane Gas Orifice Size	.063 in./1.70 mm

* Inches water column

The first name in fireplaces

3. Gas Conversions

Natural or propane gas fuel conversions necessary to meet the application need to be made by a qualified technician using Hearth & Home Technologies specified and approved parts.

In the event your appliance must be converted to
propane/standing pilot, use **CKVP**;
natural gas/standing pilot, use **CKVN**;
propane/intermittent pilot, use **DCKVP**;
natural gas/intermittent pilot, use **DCKVN**.

WARNING!
The gas control valve has been preset at the factory. Altering settings may result in fire hazard or bodily injury.

4. Wiring

a. Intermittent Pilot Ignition

1) This appliance requires a 110VAC supply to the appliance junction box for operation. A wiring diagram is shown in Figure 12.

2) This appliance is equipped with an intermittent pilot control valve which operates on a 3V system.

3) This appliance is supplied with a battery pack and a 3VAC transformer, which requires the installation of the supplied junction box. We highly recommend that the junction box be installed at this time to avoid reconstruction. The battery pack requires two D cell batteries (not included). Batteries cannot be placed in the battery pack while using the 3VAC transformer. Conversely, the transformer must be unplugged if the battery pack is used.

Note: This appliance must be electrically wired and grounded in accordance with local codes or, in the absence of local codes, with **National Electric Code ANSI/NFPA 70-latest edition** or the **Canadian Electric Code, CSA C22.1**.

CAUTION:
Battery polarity must be correct or control module damage will occur.

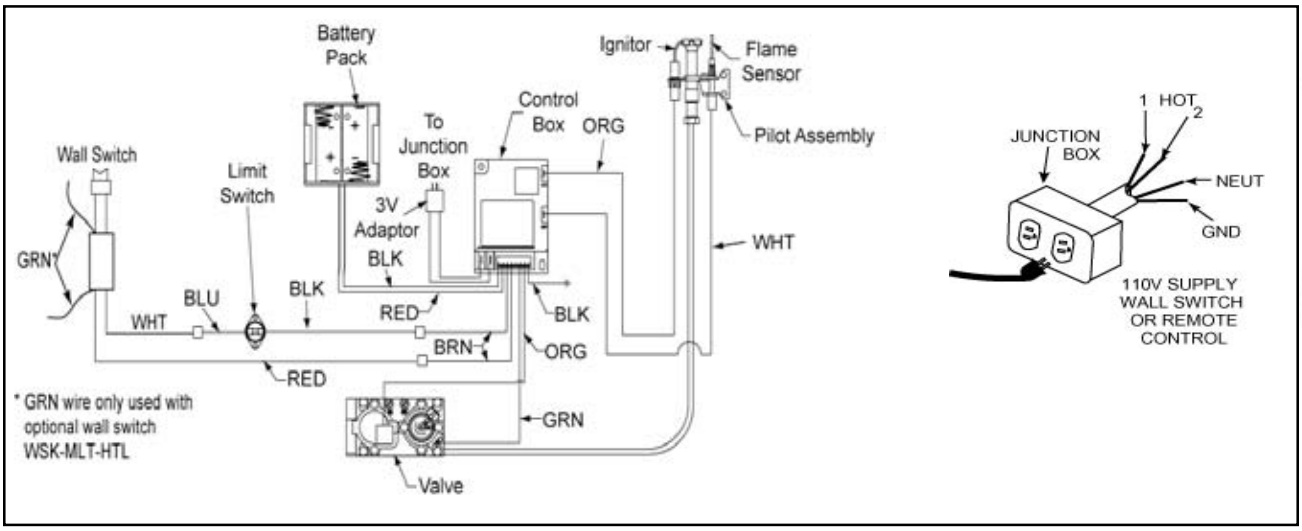

Figure 12
Intermittent Pilot Ignition Wiring Diagram

The first name in fireplaces

The first name in fireplaces

b. Standing Pilot Ignition

1) **Appliance Requirements:** A wiring diagram is shown in Figure 13.

2) **Optional Accessories Requirements:** Wiring for optional accessories should be done now to avoid reconstruction.

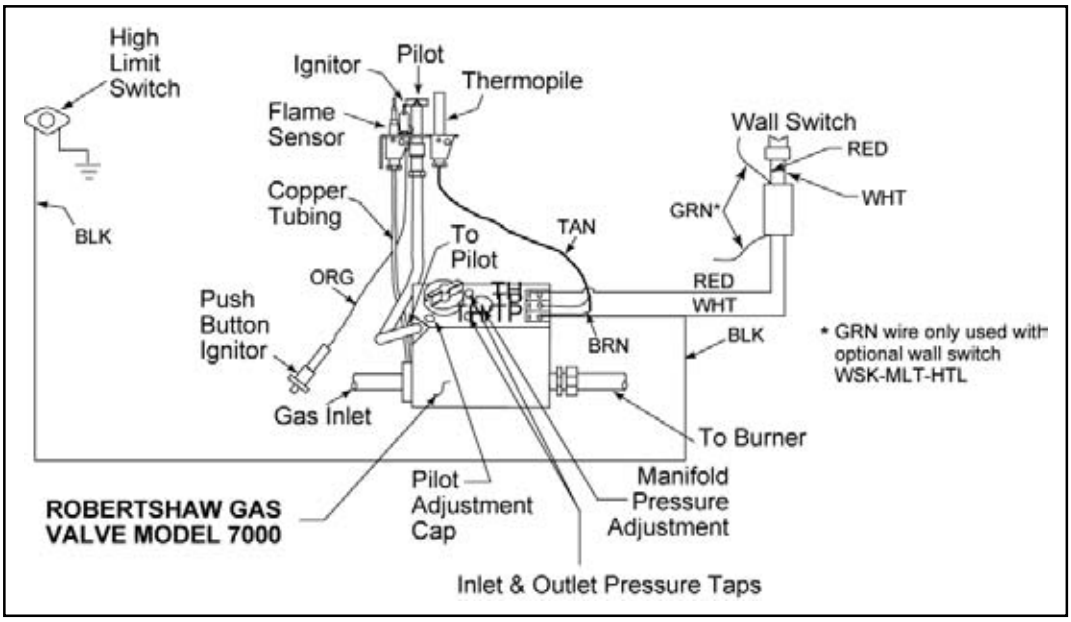

Figure 13
Standing Pilot Ignition Wiring Diagram

WARNING!

This standing pilot appliance does not require a 110VAC supply for operation. Connecting the appliance/wall switch to a 110VAC supply will cause the appliance to malfunction and destroy the valve and thermopile.

5. Junction Box Installation Instructions

a. Remove the junction box assembly from the valve compartment.

b. If the box is being wired from the OUTSIDE of the appliance:

1) Loosen two screws on the Romex connector, feed the necessary length of wire through the connector and tighten the screws.

2) Make all necessary wire connections to the receptacle and assemble the receptacle and cover to the junction box.

3) Attach the junction box assembly to the outside of the appliance with the two screws provided.

c. If the box is being wired from the INSIDE of the appliance;

1) Pull the electrical wires from outside the appliance through this opening into the valve compartment.

2) Loosen the two screws on the Romex connector, feed the necessary length of wire through the connector and tighten the screws.

3) Make all necessary wire connections to the receptacle and assemble the receptacle and cover to the junction box.

4) Attach the junction box assembly to the inside of the appliance with the two screws provided.

d. If the box is not to be wired at the time of appliance installation, assemble the receptacle and cover to the box and install on the inside of the appliance.

G. FINISHING

1. Combustible Finishing Material

Material made of or surfaced with wood, compressed paper, plant fibers, plastics, or any material capable of igniting and burning, whether flame proofed or not, plastered or unplastered (this includes drywall).

2. Noncombustible Finishing Material

Material which will not ignite and burn. Such materials are those consisting entirely of steel, iron, brick, tile, concrete, slate, glass or plasters, or combination thereof, or have a UL Fire rating of zero (0).

3. High Temperature Sealant Material

Sealants that will withstand high temperatures: General Electric RTV103 (Black) or equivalent. Rutland, Inc. Appliance Mortar #63 or equivalent.

A high temperature sealant, 1/8" inch wide minimum, must be used to close off gaps between the appliance and facing to prevent cold air leaks. See Figure 14.

4. Combustible Mantel

A combustible mantel may be installed at a minimum of 42 inches above the base of the appliance and a maximum depth of 12".

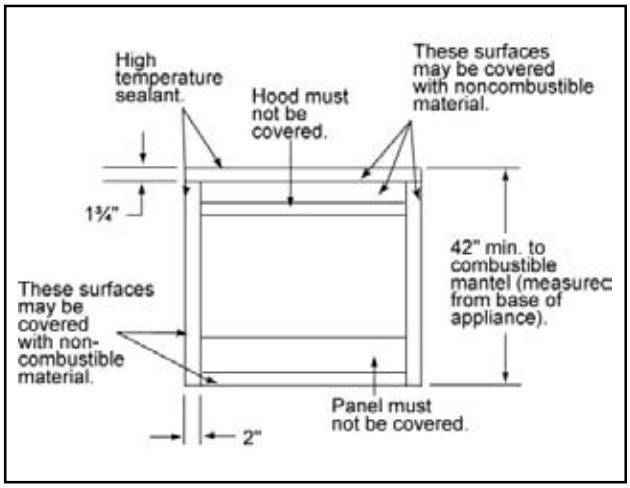

Figure 14
Finishing Materials

WARNING!
Lower panel on this appliance cannot, in any way, be covered as it may create a fire hazard.

5. Attach the Hood

The hood is to be located above the glass panel. The hood must be attached or a fire hazard may result. Locate the three tabs just inside the upper section of the appliance. Position the hood and slide into position. See Figure 15.

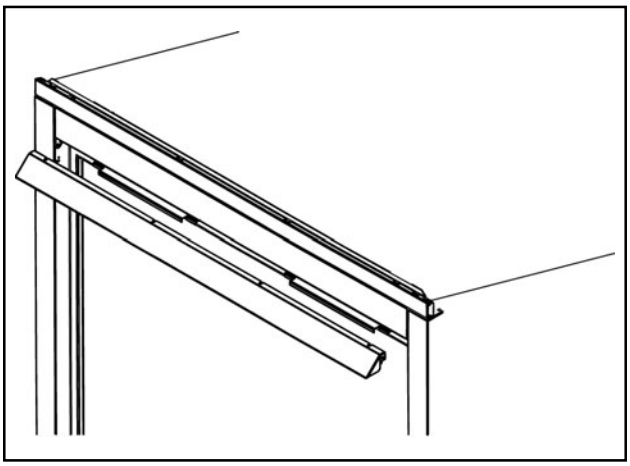

Figure 15
Hood Replacement

6. Remove the Glass and Screen

See page 20 of this manual.

7. Prepare the Appliance

The log set should look similar to that in Figure 16.

Figure 16
Caliber Log Set

The first name in fireplaces

The first name in fireplaces

8. Place the Vermiculite and Lava Rock

Place the vermiculite and lava rock around, but not on, the burner. See Figure 17. It is not necessary to use the entire bag. Save the remainder for future use.

9. Place the Rock Wool

Place a small amount of 1/2" diameter pieces (dime-size) of rock wool on the burner pan so that the rock wool touches but does not cover the holes in the burner pan. This will provide the "glowing embers" look. See Figure 17. It is not necessary to use the entire bag. Save the remainder for future use.

10. Replace the Glass and Screen

See page 20 of this manual.

WARNING - RISK OF CARBON MONOXIDE!
Never operate this appliance with the glass removed.

WARNING - RISK OF CARBON MONOXIDE!
Do not hit or strike glass. Do not operate this appliance if the glass is broken or cracked.

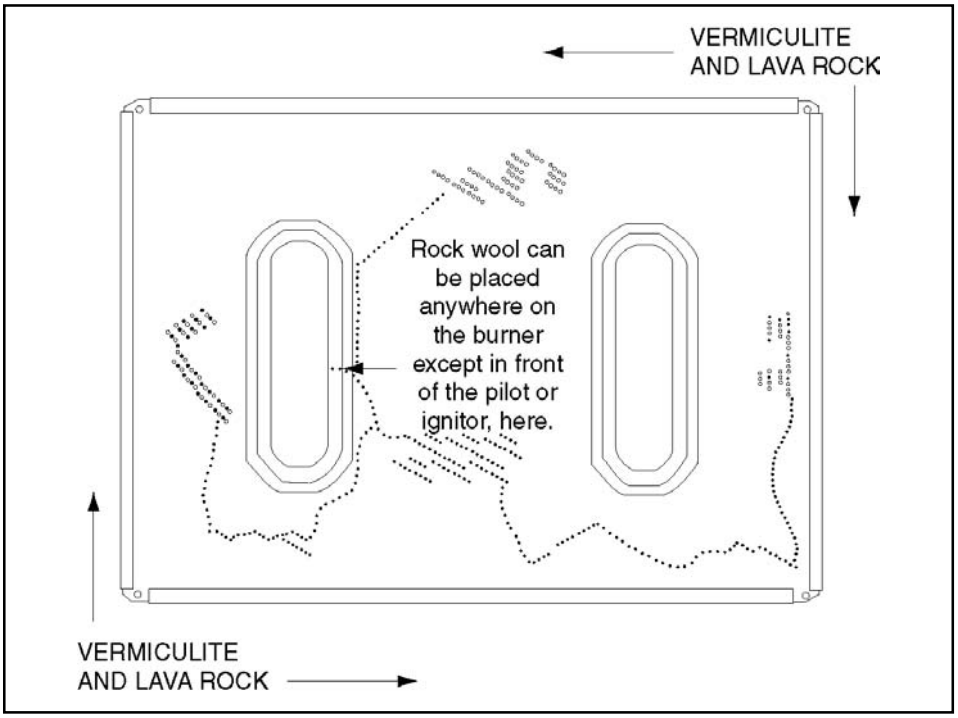

Figure 17
Placing the Vermiculite and Lava Rock
(Logs are removed for clarity.)

INSTALLATION IS COMPLETE

H. IGNITION

To determine whether your appliance is an intermittent pilot ignition or a standing pilot ignition, open the control access panel to examine the wiring system. If your system has a red ignitor button as shown in Figure 18, you own a standing pilot ignition appliance. If no red ignitor button is present, you own an intermittent pilot ignition appliance.

You may also check the rating label located on the inside of the control access panel to determine ignition type.

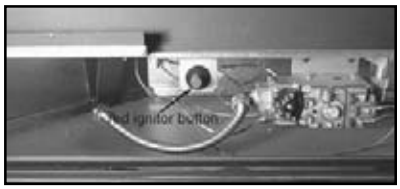

Figure 18
Standing Pilot Ignition

I. LIGHTING INSTRUCTIONS

1. Intermittent Pilot Ignition Appliances

FOR YOUR SAFETY READ BEFORE OPERATING

WARNING! If you do not follow these instructions exactly, a fire or explosion may result causing property damage, personal injury or loss of life.

A. This appliance does not have a pilot. It is equipped with an ignition device which automatically lights the burner. Do not try to light the burner by hand.

B. BEFORE OPERATING smell all around the appliance area for gas. Be sure to smell next to the floor because some gas is heavier than air and will settle on the floor.

WHAT TO DO IF YOU SMELL GAS

- Do not try to light any appliance.
- Do not touch any electric switch; do not use any phone in your building
- Immediately call your gas supplier from a neighbor's phone. Follow the supplier's instructions.
- If you cannot reach your gas supplier, call the fire department.

C. Use only your hand to turn the manual shutoff valve.. Never use tools, If the lever or knob will not move by hand, don't try to repair it - call a qualified service technician. Force or attempted repair may result in a fire or explosion.

D. Do not use this appliance if any part has been under water. Immediately call a qualified service technician to inspect the appliance and to replace any part of the control system and any gas control which has been under water.

LIGHTING INSTRUCTIONS

1. STOP! Read the safety information above on this label.
2. Turn wall switch to the "OFF" position.
3. This appliance is equipped with an ignition device which automatically lights the burner. Do not try to light burner by hand.
4. Wait five minutes to clear out any gas. If you then smell gas, STOP! Follow "B" in the safety information above on this label. If you don't smell gas, go on to the next step.
5. To turn on burner, turn on all electric power to this appliance.
6. If the appliance will not operate, follow the instructions "TO TURN OFF GAS TO APPLIANCE" and call your service technician or gas supplier.

TO TURN OFF GAS TO APPLIANCE

1. Turn off the wall switch.
2. Open the control access panel.
3. Turn the gas line to the CLOSED position. Do not force.
4. Close the control access panel.

The first name in fireplaces

The first name in fireplaces

2. Standing Pilot Ignition Appliances

FOR YOUR SAFETY READ BEFORE LIGHTING THE STANDING PILOT

WARNING!

If you do not follow these instructions exactly, a fire or explosion may result causing property damage, personal injury or loss of life.

A. This appliance has a manual ignition device that lights the pilot. When lighting the pilot, follow these instructions exactly.

B. BEFORE LIGHTING smell all around the appliance area for gas. Be sure to smell next to the floor because some gas is heavier than air and will settle on the floor.

WHAT TO DO IF YOU SMELL GAS

- Do not try to light any appliance.
- Do not touch any electric switch; do not use any phone in your building.
- Immediately call your gas supplier from a neighbor's phone. Follow the supplier's instructions.
- If you cannot reach your gas supplier, call the fire department.

C. Use only your hand to push in or turn knob. Never use tools. If the knob will not push in or turn by hand, don't try to repair it; call a qualified service technician. Force or attempted repair may result in a fire or explosion.

D. Do not use this appliance if any part has been under water. Immediately call a qualified service technician to inspect the appliance and to replace any part of the control system and any gas control which as been under water.

LIGHTING INSTRUCTIONS

STOP! Read the safety information above on this label!

1. Turn off wall switch.
2. Open control access panel.
3. Turn gas line to "CLOSED". Wait 5 minutes to clear out any gas. Then smell for gas, including near the floor. If you smell gas, STOP! Follow "B" in the safety information above on this label. If you don't smell gas, go to the next step.
4. Turn gas line to "OPEN".
5. Turn pilot knob clockwise to "OFF". Knob may have t o be depressed to pass the "PILOT" position.
6. Locate pilot assembly inside appliance.
7. Locate red ignitor button.
8. Turn pilot knob to "PILOT" and push in.
9. Continue to hold in pilot knob and push the red ignitor button 12-15 times until small blue pilot flame appears.
10. Continue to hold in pilot knob for approximately one minute. Pilot should remain lit. If pilot goes out, wait 5 minutes and repeat Steps 4-9.
11. Release and turn the knob counterclockwise to "ON". To light the main burner, turn the wall switch to "ON". Do not light by hand.
12. If the appliance will not operate, follow the instructions "To Turn Off Gas To Appliance" and call your service

Note: To light main burner, turn the Wall Switch to "ON". Do not light by hand.

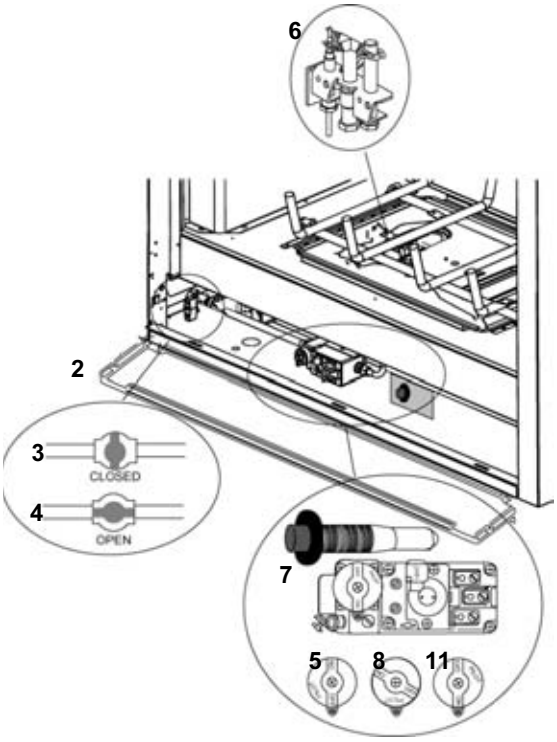

TO TURN OFF THE GAS TO THE APPLIANCE

1. Turn off the wall switch.
2. Open the control access panel.
3. Turn the gas line to CLOSED position. Do not force.
4. Close the control access panel.

J. SEASONAL CHECKLIST

WARNING!

Children and adults should be alerted to the hazards of high surface temperatures and should stay away to avoid burns or clothing ignition. Young children should be carefully supervised when they are in the same room as the appliance.

CAUTION:

Any safety screen or guard removed for servicing an appliance must be replaced prior to operating this appliance. Clothing or other flammable material should not be placed on or near the appliance.

Installation and repair should be done by a qualified service person. The appliance should be inspected before use and at least annually by a qualified service person. More frequent cleaning may be required due to excessive lint from carpeting, bedding material, etc. It is imperative that control compartments, burners and circulating air passageways of the appliance be kept clean.

Before operating this appliance, have a qualified technician:

1. Review proper placement of logs, rock wool and vermiculite.
2. Check wiring.
3. Check the air shutter adjustment.
4. Ensure there are no gas leaks.
5. Ensure the glass is sealed and in proper position.
6. Ensure the flow of combustion and ventilation air is not obstructed.

WARNING!

Keep the area near the appliance clear and free from combustible materials, gasoline and other flammable vapors and liquids.

WARNING!

Do not use this appliance if any part has been under water. Immediately call a qualified service technician to inspect the appliance and to replace any part of the control system and any gas control which has been under water.

1. Standing Pilot Operation

Hearth & Home Technologies recommends you leave the pilot on year round.

a. Lighting the Appliance During Regular Use

Turn the wall switch to “ON”.

b. Shutdown During Regular Use

Turn the wall switch to “OFF”.

c. Shut Down Appliance for a Long Period of Time

1) Turn all wall switches to “OFF”
2) Turn pilot knob on valve to “OFF”
3) Turn the manual shutoff valve to “CLOSED”
4) To relight the pilot and appliance, see page 16.

2. Intermittent Pilot Ignition Operation

a. Lighting the Appliance During Regular Use

Turn the wall switch to “ON”.

b. Shutdown During Regular Use

Turn the wall switch to “OFF”.

c. Shut Down Appliance for a Long Period of Time

1) Turn all wall switches to “OFF”
2) Turn the manual shutoff valve to “CLOSED”
3) To relight the appliance, see page 15.

The first name in fireplaces

The first name in fireplaces

3. Fuel

Do not burn wood or other material in this appliance.

Natural or propane gas fuel conversions necessary to meet the application need to be made by a qualified technician using Hearth & Home Technologies specified and approved parts.

In the event your appliance must be converted to
propane/standing pilot, use **CKVP**;
natural gas/standing pilot, use **CKVN**;
propane/intermittent pilot, use **DCKVP**;
natural gas/intermittent pilot, use **DCKVN**.

CAUTION:
The air kit handle may get hot while burning the appliance. Use care when operating the handle.

4. Operating the Outside Air Kit

The outside air kit is supplied as an optional feature with this appliance. The outside air kit helps to decrease the amount of room air taken, by utilizing outside air for combustion. It is strongly recommended that it be installed.

To operate the outside air kit, before starting the appliance, open the control access panel. Locate the outside air door handle. See Figure 19. Rotate the handle to the “OPEN” position. When through burning the appliance, open the control access panel, grasp the handle and rotate to the “CLOSED” position.

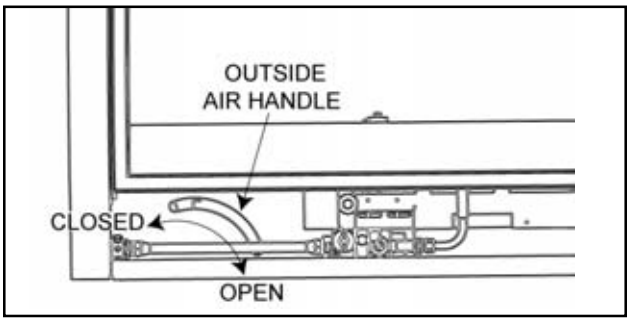

Figure 19 - Operating the AK14 Outside Air Kit

WARNING!
Do not use this appliance if any part has been under water. Immediately call a qualified service technician to inspect the appliance and to replace any part of the control system and any gas control which has been under water.

WARNING!
Never use gasoline, gasoline-type lantern fuel, kerosene, charcoal lighter fluid or similar liquids in this appliance. Keep any flammable liquids a safe distance from the appliance.

K. START-UP ISSUES

Issues:	Possible Causes and Solutions:
1. Condensation on the glass.	1. This is a result of gas combusion and temperature variations. As the appliance warms up, this condensation should disappear.
2. Blue flames.	2. This is a result of normal operation and the flames will begin to yellow as the appliance is allowed to burn.
3. Odor from the appliance.	3. When first operated, this appliance may release an odor for the first several hours. This is caused by the curing of the paint and the burning off of any oils remaining from manufacturing.
4. Film on the glass.	4. This is a normal result of the curing process of the paint and logs. Glass should be cleaned within 4-6 hours of initial burning to remove deposits left by oils from the manufacturing process. A non-abrasive clearner, such as Brasso may be necessary.

L. MAINTENANCE INSTRUCTIONS

1. Clean the Burner and Control Compartment

Keep the burner and control compartment clean by brushing and vacuuming at least once a year. Always turn off the wall switch (or remote control) and gas valve before cleaning.

2. Check the Vent System

Test the venting system periodically to ensure proper operation. Remove the hood (grasp hood and pull out) and proceed with the directions in Step 4, page 9.

3. Check the Flame Patterns

Check the flame of the burner periodically, making sure the flames are steady, not lifting or floating. The flame color should be blue with yellow tips. The flame sensor (intermittent pilot) or thermopile and thermocouple (standing pilot) tips should be covered with flame. See Figures 20-22.

Note: After extended periods of burning, film may build up on the flame sensor (intermittent pilot ignition). The flame sensor should be cleaned annually with emery cloth to remove this build up.

If the vent configuration is installed incorrectly, the vent may cause the flames inside the appliance to lift or "ghost" - a dangerous situation. Inspect the flames after installation to ensure proper performance. See Figure 20. If the vent configuration is correct, yet the flames are lifting or ghosting, shut off gas to the appliance and contact the dealer.

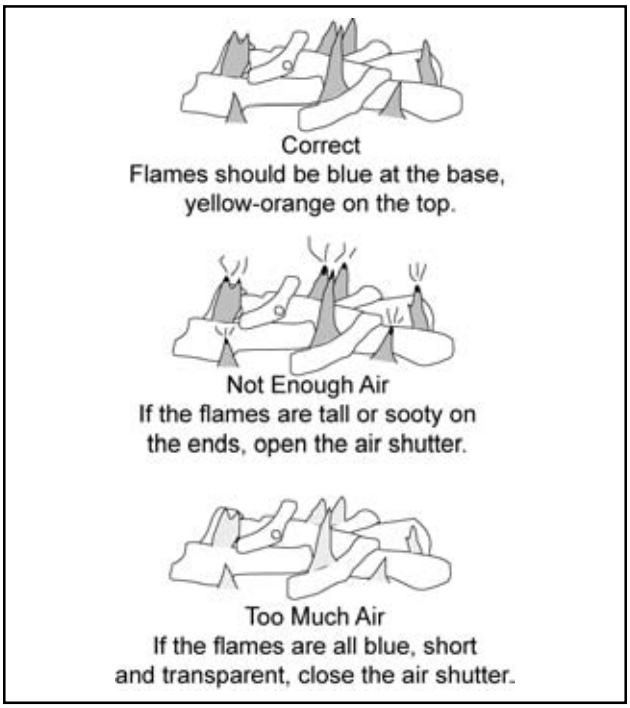

Figure 20 - Flame Patterns

To prevent the possibility of soot, we have provided your appliance with an adjustable air shutter. Your air shutter is provided in the closed position for natural gas and in the open position for propane. In the event soot is accumulating in your appliance, the air shutter should be opened farther. This can be done by opening the control access panel and locating the handle located on the bottom of the firebox. When the handle is turned out, the air shutter is fully closed. When the handle is turned in, the air shutter is fully open.

Note: The look of the flames and embers may differ based on the type of fuel and venting assembly that is required.

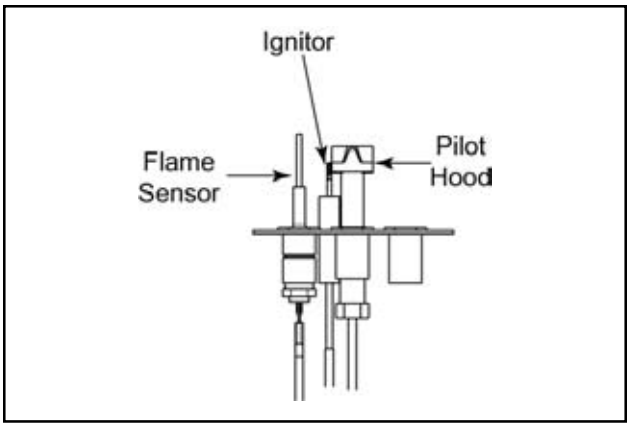

Figure 21 - Intermittent Pilot Ignition

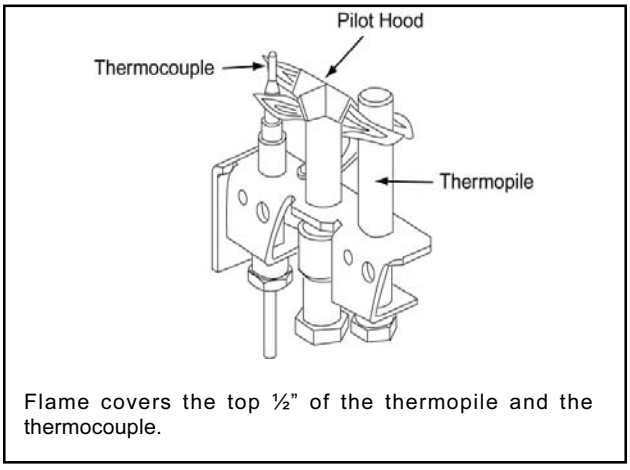

Figure 22 - Standing Pilot

The first name in fireplaces

The first name in fireplaces

4. Venting System Inspection

The appliance and venting system should be inspected before use, and at least annually, by a qualified field service person, to ensure that the flow of combustion and ventilation air is not obstructed.

5. Cleaning the Glass

See Figure 23. Never operate this appliance without the glass properly secured in place or if the glass is broken.

In the event of glass breakage, carefully remove the glass frame. This will allow the removal of all glass fragments and sheet metal edge protection strips. Vacuum all remaining glass pieces with a shop vac. **DO NOT VACUUM IF PIECES ARE HOT!**

Replace glass with a Heatilator glass panel assembly only, ordered through your local distributor. Never use substitute material.

Safety Note:

Handle glass with care to avoid striking, scratching or slamming shut. **NEVER** clean glass when hot. Keep children and pets a safe distance away.

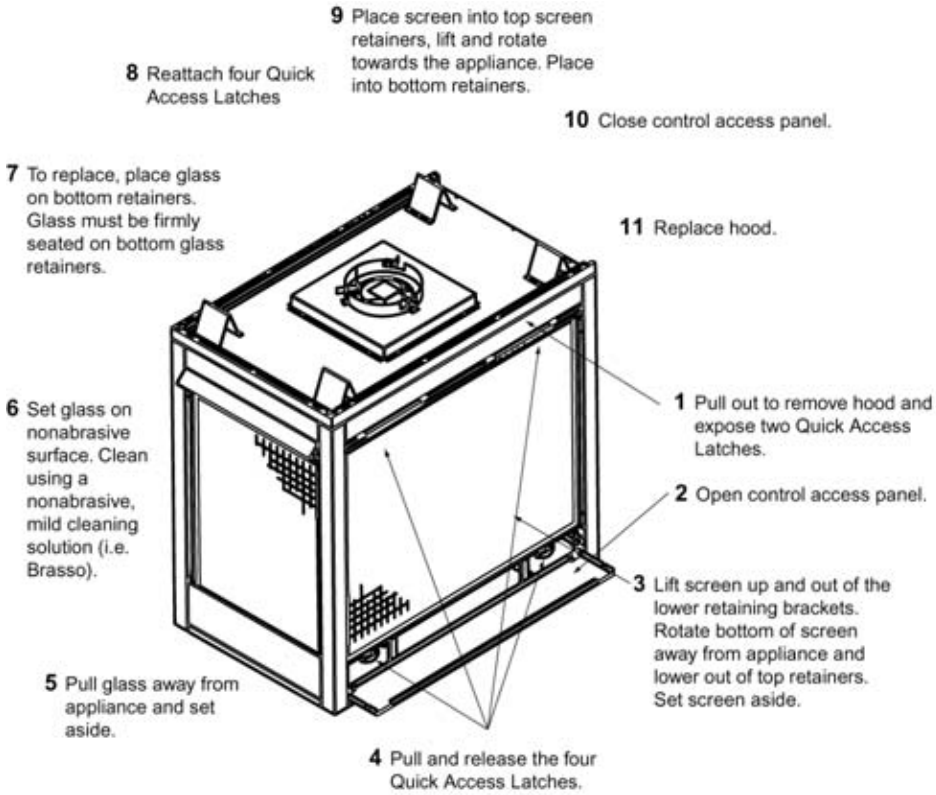

Figure 23 - Glass Cleaning

6. Log Removal/Replacement

If removal of the logs becomes necessary, remove the four screws at each end of the grate. Grasp the grate as shown. Pull the logs up and off the burner. See Figure 24.

To replace the logs, grasp the grate as shown. Lower the log set onto the burner pan, making sure the grate bars drop into holes provided. Attach the four screws at the end of the grate.

Figure 24 - Log Removal

M. OPTIONAL COMPONENTS

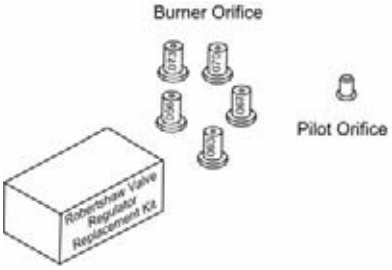

CKVP
Natural Gas to Propane
Standing Pilot Conversion Kit

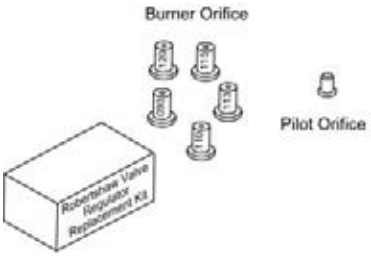

CKVN
Propane to Natural Gas
Standing Pilot Conversion Kit

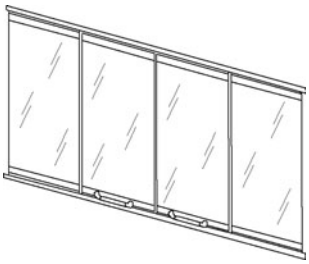

DF370B
Fixed End Panel - Brass

DF318B
Fixed End Panel - Stainless Steel

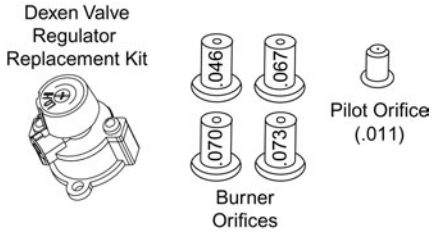

DCKVP
Natural Gas to Propane
Standing Pilot Conversion Kit

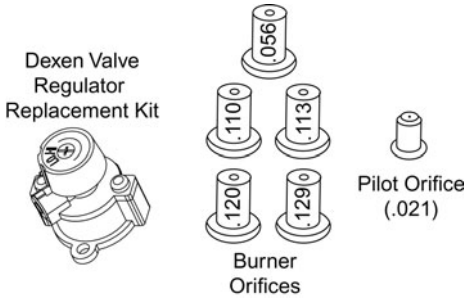

DCKVN
Propane to Natural Gas
Standing Pilot Conversion Kit

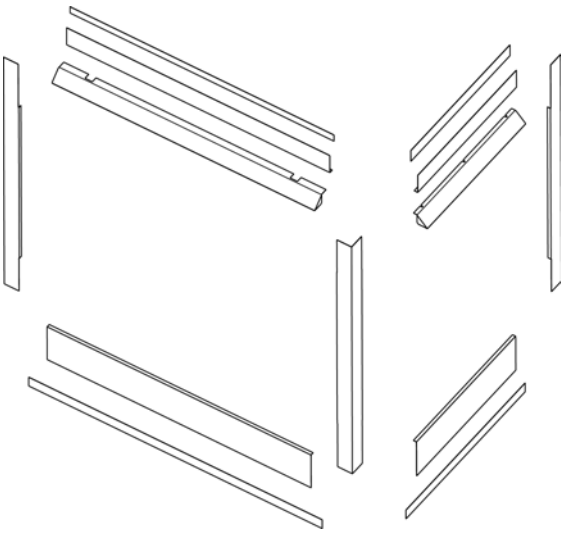

TKS3B, TKFL3B, TKIS3B, TKD5B
Brass Trim Kits

TKD5S
Stainless Steel Trim Kit

WSK-MLT-HTL
Multi-Function Wall Switch

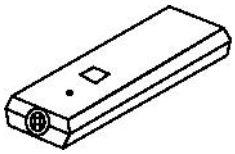

RC-SMART-HTL
Remote Control

RC-ELEC-HTL
Remote Control
(Electronic Ignition)

RC-BATT-HTL
Battery Operated Remote Control (Standing Pilot)

RCT-MLT-HTL
Multi-Function Remote Control

SMART-STAT-HTL
Remote Control with Thermostat Control

SMART-BATT-HTL
Battery Operated Remote Control with Thermostat Control

The first name in fireplaces

N. REPLACEMENT PARTS

Replacement parts are available from you distributor/dealer.

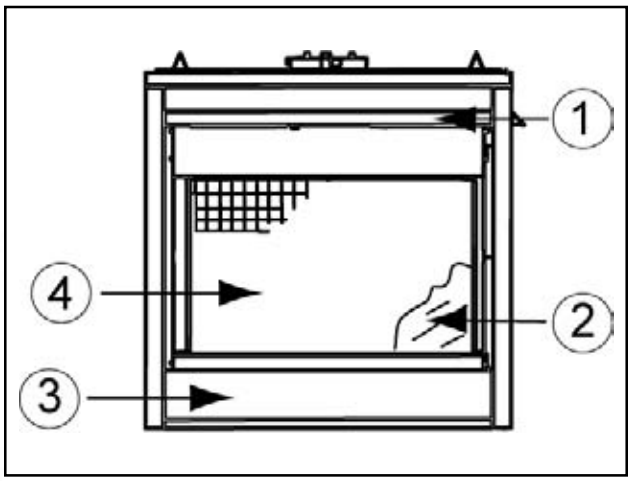

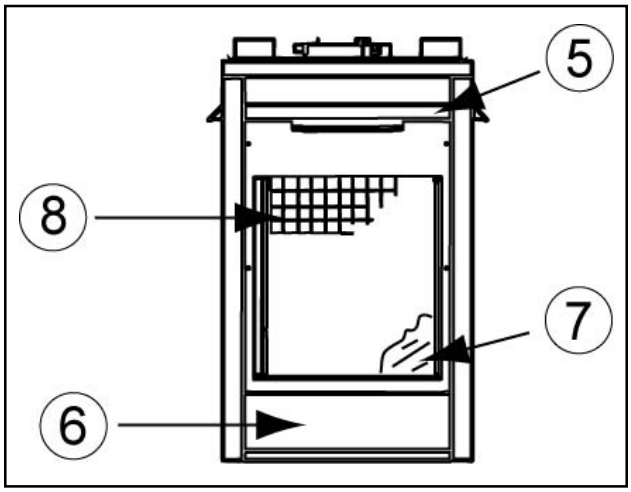

ITEM	PART #	DESCRIPTION
1	27658	Front Hood
2	26155	Front Glass Assembly
3	25893	Control Access Panel
4	26161	Front Screen Assembly
5	27659	Side Hood
6	25913	Lower End Face
7	26158	End Glass Assembly
8	29693	End Screen Assembly
9	30537 33858	Glass Latch Assembly (upper) Glass Latch Assembly (lower)
10	27793	Grate/Log Assembly
11	25912	Lower Rear Panel (not shown)

#10 - Grate/Gas Log Assembly

The first name in fireplaces

Index

A

Air Clearances 8
Air Kit
  Installation 9
  Operation 18
Air Kit Handle 18
Air Shutter 19
Appliance Locations 6
Appliance Preparation 13

B

BTUs 10
Building Codes 4
Burner and Control Compartment 19

C

Certification 4
Chase Installation 9
Cleaning
  Burner & Control Compartment 19
  Glass 20
Clearances 6
Codes
  Building 4
  Electric 11
  Gas 4, 10
Combustible Mantel 13
Combustible Material 13
Control Access Panel Removal 10
Conversion Kit 21
Conversions 11, 18

D

Dimensions 5

E

Electric Codes 11

F

Finishing
  Combustible Mantel 13
  Combustible Materials 13
  High Temperature Sealant 13
  Noncombustible Material 13
Firestop Spacer 8
Flame Sensor 19
Flames
  Checking the Patterns 19
Fuel 11, 18
Fuel Conversions 11, 18

G

Gas Codes 4, 10
Gas Line Connection 10
Glass
  Certification 4
  Cleaning 20
  Specifications 4
Grounding 11

H

High Altitude Installation 6
High Temperature Sealant 13
Hood 13

I

Input Rate 9, 10
Intermittent Pilot Ignition 11, 15, 17

J

Junction Box Installation 12

L

Lava Rock 14
Lighting Instructions 17
  Standing Pilot Ignition 16
Locations 6
Log Set 13, 20
  Removal/Replacement 20

M

Mantel 13

N

Nailing Flanges 7
Nomenclature 5
Noncombustible Material 13

O

Outside Air Kit 9
  Installation 9
  Operation 18

R

Rock Wool 14

S

Safety Precautions 2
Sealant Material 13
Space Requirements 6
Standing Pilot Ignition 12, 16

T

Termination Installation 9
Testing Ventilation 9

V

Venting
  Checking the System 9, 19
  System Inspection 20
  Testing the System 9
  Vent System Maintenance 19
Vermiculite 14
Vertical Termination 8
  Chase Installation 9
  Clearances 8
  Firestop Spacer 8
  Firestop Spacer Installation 8
  Termination Installation 9
  Vent Height 9
  Vent Installation 8
  Vent Lengths 8
Volume 6

W

Water Damage 17
Wiring 11
  Intermittent Pilot Ignition 11
  Standing Pilot Ignition 11, 12

The first name in fireplaces

heatilator®

The first name in fireplaces

GAS APPLIANCE (FIREPLACE) LIMITED LIFETIME WARRANTY

HEARTH & HOME TECHNOLOGIES INC. ("HHT") extends the following warranty for HEATILATOR® gas appliances installed in the United States of America or Canada (the "Appliance"). Dealers and employees of HHT have no authority to make any warranty or authorize any remedies in addition to or inconsistent with the terms of this warranty.

Limited Lifetime Warranty

HHT warrants the Appliance for component failure due to a manufacturing defect of any of the following components: combustion chamber, burner pan, and logs. The Limited Lifetime Warranty specified above is subject to the conditions, exclusions and limitations listed below, is for the period the Appliance is owned by the original homeowner only, and is nontransferable.

1 Year Limited Warranty

HHT warrants the Appliance to be free from failure of any of the following components for a period of one year after installation: valve, flexible gas line connector, glass panel, fan, direct vent chimney components, factory paint, gasket, piezo ignitor, thermopile, thermocouple, junction box, pilot assembly, shutoff valve, high limit switch, refractory liners, transformer, and control box. If the Heatilator Appliance is found to be defective in either material or workmanship within one year of the date of original installation, HHT will provide replacement parts at no charge and pay reasonable labor and freight costs, and is for the period of one year following the date of original installation of the Appliance.

Conditions, Exclusions, & Limitations of Liability

A. Both the Limited Lifetime and 1 Year Limited Warranties supplied by HHT apply only while the Appliance is in its location of original installation. HHT's obligation under this warranty does not extend to damages resulting from (1) installation, operation or maintenance of the Appliance not in accordance with the Installation Instructions, Operating Instructions, and the Listing Agent Identification Label furnished with the Appliance; (2) installation which does not comply with local building codes; (3) shipping, improper handling, improper operation, abuse, misuse, accident or unworkmanlike repairs; (4) environmental conditions, inadequate ventilation or drafting caused by tight sealing construction of the structure, air handling devices such as exhaust fans or forced air furnaces, or other causes; (5) use of fuels other than those specified in the Operating Instructions; (6) installation or use of components not supplied with the Appliance or any other components not expressly authorized and approved by HHT; and/or (7) modification of the Appliance not expressly authorized and approved by HHT in writing. This warranty is limited to only the component parts manufactured or supplied by HHT.

B. HHT's liability under both the Limited Lifetime Warranty and the 1 Year Limited Warranty is limited to the replacement and repair of defective components or workmanship during the applicable period. HHT may fully discharge all of its obligations under such warranties by repairing the defective component(s) or at HHT's discretion, providing replacement parts at no charge and paying reasonable labor and freight costs.

C. EXCEPT TO THE EXTENT PROVIDED BY LAW, HHT MAKES NO EXPRESS WARRANTIES OTHER THAN THE WARRANTY SPECIFIED HEREIN. THE DURATION OF ANY IMPLIED WARRANTY IS LIMITED TO DURATION OF THE WARRANTY SPECIFIED ABOVE.

D. Some states do not allow exclusions or limitations of incidental or consequential damages, so those limitations may not apply to you. This warranty gives you specific rights; you may also have other rights which vary from state to state.

How to Obtain Service

To obtain service under this warranty you must:

1. Send written notice of the claimed condition to Heatilator Technical Service Department, Hearth & Home Technologies, 1915 W. Saunders Street, Mt. Pleasant, Iowa 52641-1563. You may also register your claim online at www.heatilator.com/contact.asp.

2. Provide proof of purchase, model number, serial number, and manufacturing date code to HHT.

3. Provide HHT reasonable opportunity to investigate the claim, including reasonable opportunity to inspect the Appliance prior to any repair or replacement work and before the Appliance or any component of the Appliance has been removed from the place of original installation.

4. Obtain HHT's consent to any warranty work before the work is done.

ADDITIONAL INFORMATION:

If you would like information on current HEATILATOR products or want to locate a dealer in your area, call 1-800-927-6841.

©2003 Heatilator® is a Registered Trademark of Hearth & Home Technologies Inc.